Cadillac® CN Series

Heavy-Duty, Threaded & Environmentally Sealed Power & Control Connectors, Distributed by: Eastern Connector Specialty Corp

ISO 9001:2000 CERTIFICATION Intertek

INTERTEK LISTED C US

Made in the USA

Clements National Company

Catalog Contents

CN Series Features/Electrical Ratings 1

Contact Ratings & Replacement Information 2

Plug & Receptacle Part Number Code Logic 3

Connector Component Overview 4

Connector Design Comparisons; Crimp - Solder - Pressure 5

Straight Plug Hardware Assemblies 6-9

In-Line Receptacle Hardware Assemblies 10-13

Panel Mount Receptacle Hardware Assemblies 14

Insert Configuration Index 15

Insert Configurations (in ascending order by number of contacts) 16-29

Connector Components & Accessories
- Shells 30

- Cable Adapters 31

- Other Shell Hardware 32

- Environmental Covers 33

- Rear Cable Adapters 34

Cable Grip Components - Basket Weave Grips, Sealing Grommets & Washers 35

Contact Crimp Termination Tools 36

Cadillac PDS Series 37

Cadillac Single Power MOG Series 38-39

Clements National Company, Distributed by:

Eastern Connector Specialty Corp
566 Danbury Rd, New Milford, CT 06776
Phone : 860-355-8100, Fax: 860-350-5411
Email: sales@easternconnector.com • Web: www.easternconnector.com

Product Features/Electrical Ratings

CN Series Connectors

Clements National's threaded CN Series has been designed to meet or exceed the electrical performance requirements of Mil-C-5015. This family of connectors is intermateable and interchangeable with other connector brands available in the market. The connector series has been designed for reliable, heavy-duty, environmental usage and is currently used in many types of market applications, ranging from process and control, marine, oil and gas, machine tool, industrial, power distribution systems and transportation. The performance of this connector series in the MOG marketplace is noteworthy, providing reliable, ruggedized service for power distribution and various oil rig configurations.

Clements National is a Chicago-based electrical connector manufacturer that has made a significant contribution in the connector industry by providing World class service and design solutions for various customer requirements. The CN Series has been manufactured by Clements National since the early 1990's in various transit applications to satisfy the demanding and daily environmental conditions of passenger transit rail service. Now, Clements National offers a broader product line capability to provide a greater spectrum of insert configurations and hardware variations. Clements National has obtained UL and CSA certification and CE certification is applied for. In addition, Clements National's upcoming Zone 1 - Ilc hazardous environmental connectors are ATEX certified and will soon be introduced.

CN Series Performance Benefits

- UL & CSA Certification (consult our web site for latest product certifications)
- Connector designs offered in crimp, solder and pressure terminals based on insert arrangement
- All hardware is machined using 6061T aluminum bar stock
- Quick coupling, double-lead thread resists cross-mating problems and provides positive mating
- Natural hardcoat plating provides a durable and scratch resistant finish. Black hardcoat plating is available, consult the factory
- Silver plated contacts (standard)

CN Series Electrical Performance

Service Voltage Ratings (for various specifications)
N.E.C. voltage rating is designated by a service voltage rating letter which is shown listed in the table below corresponds to the insert configurations listings on pages 16-29. The voltage to which contact inserts are limited is a function of the dielectric separation between adjacent contacts and between contacts and shell.

Service Voltage	Over Surface Distance	Thru-Air Spacing	Mil-C-5015 Rating		N.E.C. Rating	
			Non-Circuit Breaking		Non-Circuit Breaking	Circuit Breaking
	Inches Nominal	Inches Nominal	DC Volts RMS	AC Volts RMS	DC Volts RMS	AC Volts RMS
Instrument	1/16	-	250	200	-	-
A	1/8	1/16	700	500	250	240
D	3/16	1/8	1250	900	600	600
E	1/4	3/16	1750	1250	600	600
B	5/16	1/4	2450	1750	600	600
C	1	5/16	4200	3000	600	600

Contact Ratings & Replacement Information

Mil Spec Ampere Ratings: (MIL-C-39029)

Based on the combination of the following:
The amount of current which an individual pin and socket contact may carry is a function of contact material and design ef ficiency of the pin and socket system as well as the ability of the primary conductor insulation to resist temperature rises due to inherent copper losses and bundling factors.

Total current carrying capacity of the connector is a function of the insert temperature which is rated at 100° C for continuous operation. The total operating temperature is the summation of the ambient temperature plus the temperature rise resulting from the thermal losses of each contact.

N.E.C. specifications may be used as a general reference on the subject in as much as pertinent cable de-rating data is included.

N.E.C. Non-Circuit Breaking Ampere Ratings

The non-interrupting current ratings, shown in the table below are based on the temperature of the contacts being within the range specified by Underwriter's Laboratories, Inc. when wire sizes are selected in accordance with the National Electrical Code.

When multiple conductors are used, the load factor and temperature rise based on ambient and total insert temperature must be taken into consideration.

Contact Ratings/Dimensions

Wire Well Dimensions - All Min. in inches (mm)

Contact Size AWG/MM	N.E.C. Ampere Rating**	Solder		Crimp*		Crimp Pullout***	Pressure Contact Torque
		Dia.	Depth	Dia.	Depth	lbs. (N)	in./lbs. (N.M)
#16 (1.5)	16	.078 (2.00)	.203 (5.15)	.078 (2.00)	.500 (12.70)	50 (222.4)	-
#12 (4.0)	30	.110 (2.80)	.250 (6.45)	.110 (2.80)	.500 (12.70)	110 (489.3)	-
#10 (6.0)	40	.142 (3.60)	.394 (10.00)	.142 (3.60)	.591 (15.00)	180 (800.7)	15 (1.7)
#8 (10.0)	50	.209 (5.30)	.516 (9.12)	.189 (4.80)	.748 (19.00)	225 (1000)	25 (2.8)
#4 (25.0)	90	.329 (8.35)	.580 (14.70)	.285 (7.24)	.875 (22.20)	400 (1779)	20 (2.3)
#1/0 (50.0)	155	.470 (11.50)	.641 (16.30)	.450 (11.40)	.775 (19.70)	550 (2447)	50 (5.7)
#4/0 (120.0)	225	.650 (16.50)	.885 (22.50)	.620 (15.70)	1.00 (25.40)	875 (3892)	100 (11.3)
500MCM	750	-	-	1.000 (25.40)	1.375 (34.90)	2500 (11120)	

* - Includes wire inspection hole.
** - Non-circuit breaking rating, based on Arcing Control (National Electrical Code).
*** - Values vary per wire stand count, consult factory.

Replacement Contacts for Crimp/Solder Inserts

Size AWG/MM	Std. Length	Std. Gnd. Length	"C" Length	"C" Gnd. Length	"C" Polarized Gnd. Length	"C" Relay Length	Std. Gnd. Polarized Length	Std. Polarized Length
#16 Pin #16 Socket	CN-4016-20L CN-4116-20L	-21L	-22L	-23L				
#12 Pin #12 Socket	CN-4012-20L CN-4112-20L	-21L	-22L	-23L		-24L		
#10 Pin #10 Socket	CN-4010-20L CN-4110-20L	-21L	-22L	-23L				
#8 Pin #8 Socket	CN-4008-20L CN-4108-20L	-21L	-22L	-23L				
#4 Pin #4 Socket	CN-4004-20L CN-4104-20L	-21L -21L	-22L	-23L -21L	-25L -25L		-26L -25L	-27L -25L
#1/0 Pin #1/0 Socket	CN-4000-20L CN-4100-20L	-21L -21L	-22L		-25L -25L			
#4/0 Pin #4/0 Socket	CN-4140-20L CN-4140-20L	-21L -21L	-22L		-25L -25L			

All contacts are machined copper alloy, furnished with standard silver plating. Consult factory for alternate finishes.

Plug Assembly Part Number Code Logic

NPLDLJ34C14-339SN1

N - Natural Hardcoated
C - Black Hardcoated*

P - Plug

L - No Cover w/o Transition Adapter
A - No Cover with Transition Adapter
E - Environmental Cover w/o Trans. Adapter
F - Environmental Cover with Trans. Adapter

D - Gland Nut
H - Insert Clamp Nut with potting sleeve
K - Basket Weave Cable Grip + Gland Nut
M - Mechanical Clamp
P - Panel Mount
T - Conduit Adapter
B - Potted Boot with Special Adapter

- Standard Cable Adapter
L - Long Cable Adapter
X - Extra Long Cable Adapter
V - Ratchet Cable Adapter

- Standard Coupling Nut
J - Jack Coupling Nut
G - Standard Glove Coupling Nut
H - Jack Glove Coupling Nut
R - Ratchet Coupling Nut
S - Ratchet Jack Coupling Nut

- Normal Key
1, 2, 3 Alt. Key
99 All Key

- Soldered
N - Crimped
P - Pressure

P - Pin
S - Socket

Insert Configuration

Shell Size

- Standard
C - Current Rupture

Cable Diameter Code No. - Grommet Size
(See page 35)
00 - Grommet not included

Receptacle Assembly Part Number Code Logic

NRLPDL34C14-339PN1

N - Natural Hardcoated
C - Black Hardcoated*

R - Receptacle

L - No Cover w/o Transition Adapter
A - No Cover with Transition Adapter
C - Hinged Door Cover w/o Trans. Adapter
B - Hinged Door Cover with Trans. Adapter
E - Environmental Cover w/o Trans. Adapter
F - Environmental Cover with Trans. Adapter

- Inline Receptacle
P - Panel Mount

- Insert Clamp Nut with potting sleeve
D - Gland Nut
H - Insert Clamp Nut with potting sleeve
K - Basket Weave Cable Grip + Gland Nut
M - Mechanical Clamp
T - Conduit Adapter
B - Potted Boot with Special Adapter

- Standard Cable Adapter
L - Long Cable Adapter
X - Extra Long Cable Adapter
V - Ratchet Cable Adapter

- Normal Key
1, 2, 3 Alt. Key
99 All Key

- Soldered
N - Crimped
P - Pressure

P - Pin
S - Socket

Insert Configuration

Shell Size

- Standard
C - Current Rupture

Cable Diameter Code No. - Grommet Size
(See page 35)
00 - Grommet not included

* - Consult factory for availability

Connector Component Overview

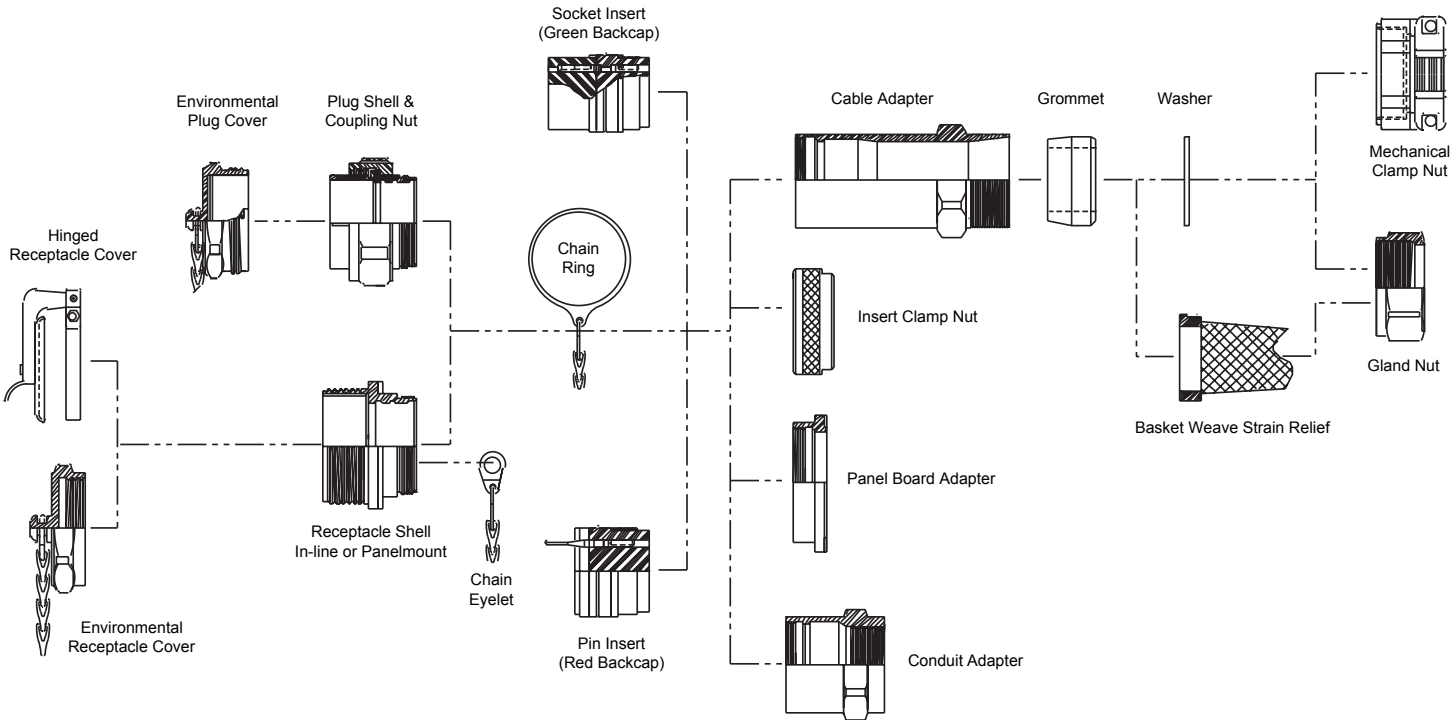

Assembled Connector Part Number examples:

NPEM
Natural Hardcoated Plug with Environmental Cover & Mechanical Clamp Nut

NREK
Natural Hardcoated Receptacle with Environmental Cover & Basket Weave Grip/Gland Nut

NRET
Natural Hardcoated Receptacle with Environmental Cover & Conduit Adapter

NREP
Natural Hardcoated Receptacle with Environmental Cover, Panel Mount

Connector Design Comparisons - Crimp, Solder & Pressure

Clements insert configurations listed on pages 16 - 29 indicate the style insert that is available: crimp, solder or pressure. While each of these inserts provide a slightly dif ferent insert design all insert types provide water, vapor, moisture and dust resistance and fit into Clements standard hardware components. The crimp insert arrangements allow the contacts to be inserted or removed from the rear through use of insertion/extraction tools without removing the insert from the connector body. The solder/pressure insert contacts however cannot be removed without first pushing out the insert from the shell body. The contacts however can be serviced while the insert is locked in the shell hardware by simply repairing each individual wire termination.

Solder/Pressure Inserts

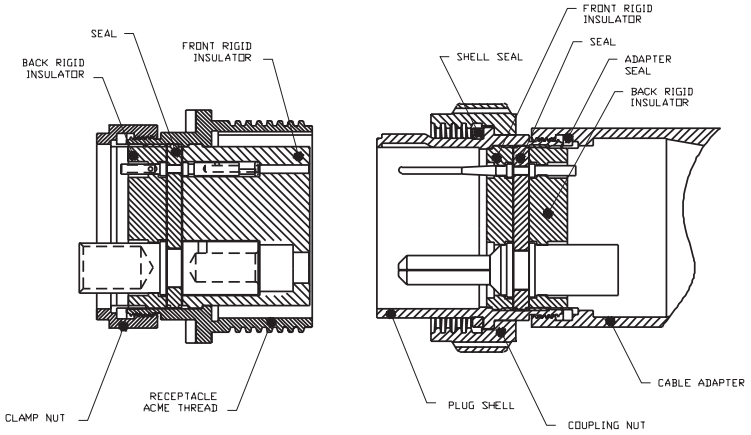

The solder/pressure inserts utilize a 3 piece insert design comprised of a rigid front insulator, resilient contact seal, and a rigid rear insulator. The solder/pressure insert design differs from the crimp insert as the contacts cannot be removed while the insert is still positioned in the shell hardware. Solder/pressure inserts are shipped with the contacts installed into the inserts and inserts installed into the connector shell hardware. Each specific wire termination can occur with the inserts assembled into the shell hardware either for solder or pressure termination. Care should be given on the solder contacts to not generate excessive heat during the soldering process. To ease assembly of wire termination the front and rear rigid insulators provide number marking. As with the crimp insert design, inserts are locked or pressurized when the clamp nut (receptacle) or cable adapter (plug/in-line receptacle) is securely threaded and tightened to the shell hardware. Service of each wired contact can easily be performed while the insert is still located in the shell hardware. If an individual contact must be replaced however, the insert must be first removed from the shell hardware and contacts removed from the insert components.

Crimp Inserts

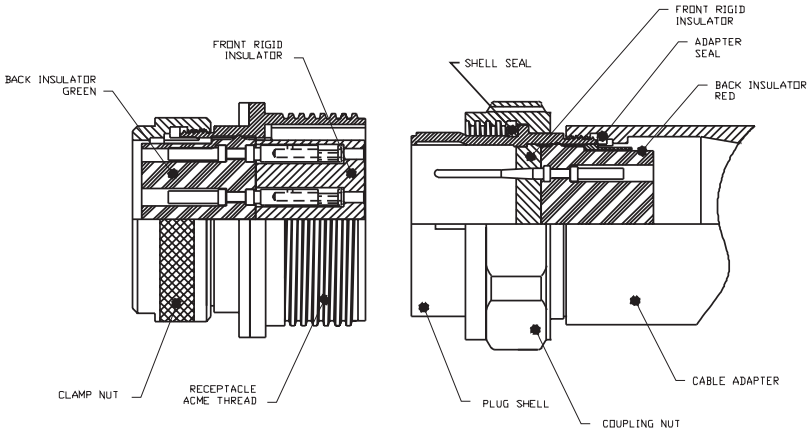

The crimp style inserts utilize a 2 piece insert design comprised of a rigid front insulator and a resilient backcap. Each of the rear backcaps are color coded to indicate use for pin contacts - red, or socket contacts - green. The contacts are crimp terminated outside the insert utilizing the correct wire size and ready for insertion into the contact cavity. The insert should be positioned into the shell hardware prior to insertion. When the insert is positioned into the shell hardware each individual contact can then be easily inserted into each cavity using the proper insertion tool. To ease the assembly of the contacts into the insert cavities, the inserts provide number markings on the front and rear of the insert. When all contacts are assembled into the insert, each contact shoulder is securely positioned into the front rigid insulator body providing a stabilized and positive alignment of the contacts. The inserts are locked or pressurized into place when the clamp nut (receptacle) or cable adapter (plug/in-line receptacle) is threaded and tightened against the plastic pressure seal shoulder. The crimp inserts allows each contact to be individually serviced/repaired by removal from the insert. In order to relieve the locked or pressured contacts, the rear retaining nut (receptacle) or the cable adapter(plug/in-line receptacle) must be backed of f the rear of the shell hardware. Once removed each contact can be easily removed by use of the proper sized removal tool. Contacts will be released at the rear of the connector.

Types NPLM & NPEM

Straight Plug with Mechanical Clamp Nut and Environmental Cover

To specify a complete plug substitute the Dash number of the contact insert for the Asterisk (*) in the catalog number listed below.

Size Cable	Shell Size	Part No. with Std. Coupling Nut	Dimensions with Standard Cable Adapter L1	L2	D	S1	S2	Part No. with Jack Coupling Nut
Select from table on page 35 and substitute Symbol No. for XX	06	NPLMXX06-*	6.18	6.71	1.81	2.37	1.75	NPLMJXX06-*
	08	NPLMXX08-*	6.43	7.03	2.31	3.00	2.25	NPLMJXX08-*
	10	NPLMXX10-*	7.00	7.59	2.81	3.75	2.75	NPLMJXX10-*
	C10	NPLMXXC10-*	7.50	8.09	2.81	3.75	2.75	NPLMJXXC10-*
	12	NPLMXX12-*	7.56	8.15	3.31	4.50	3.25	NPLMJXX12-*
	C12	NPLMXXC12-*	8.06	8.65	3.31	4.50	3.25	NPLMJXXC12-*
	14	NPLMXX14-*	8.12	8.71	3.81	5.12	3.75	NPLMJXX14-*
	C14	NPLMXXC14-*	8.62	9.21	3.81	5.12	3.75	NPLMJXXC14-*
	Dimensions with Long Cable Adapter							
	06	NPLMLXX06-*	8.37	8.96	1.81	2.37	1.75	NPLMLJXX06-*
	08	NPLMLXX08-*	8.68	9.28	2.31	3.00	2.25	NPLMLJXX08-*
	10	NPLMLXX10-*	9.25	9.84	2.81	3.75	2.75	NPLMLJXX10-*
	C10	NPLMLXXC10-*	9.75	10.34	2.81	3.75	2.75	NPLMLJXXC10-*
	12	NPLMLXX12-*	9.81	10.40	3.31	4.50	3.25	NPLMLJXX12-*
	C12	NPLMLXXC12-*	10.31	10.90	3.31	4.50	3.25	NPLMLJXXC12-*
	14	NPLMLXX14-*	10.12	10.71	3.81	5.12	3.75	NPLMLJXX14-*
	C14	NPLMLXXC14-*	10.62	11.21	3.81	5.12	3.75	NPLMLJXXC14-*

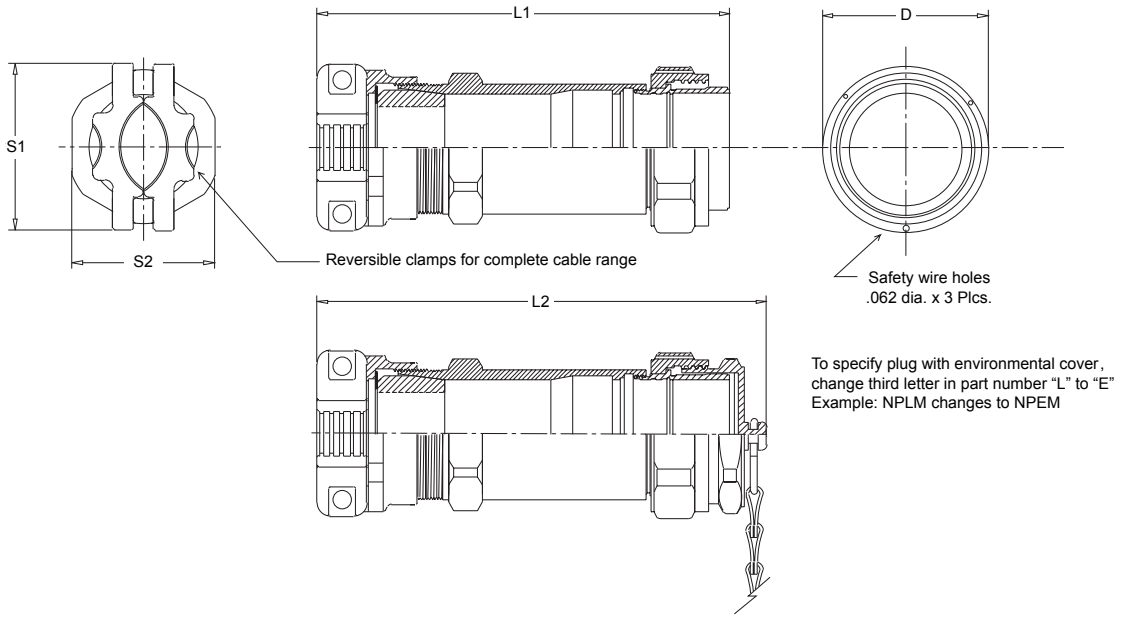

To specify plug with environmental cover, change third letter in part number "L" to "E"
Example: NPLM changes to NPEM

Types NPLK & NPEK

Straight Plug with Basket Weave Grip, Gland Nut and Environmental Cover

To specify a complete plug substitute the Dash number of the contact insert for the Asterisk (*) in the catalog number listed below.

Size Cable	Shell Size	Part No. with Std. Coupling Nut	Dimensions with Standard Cable Adapter L1	L2	D	Part No. with Jack Coupling Nut
Select from table on page 35 and substitute Symbol No. for XX	06	NPLKXX06-*	5.37	5.96	1.81	NPLKJXX06-*
	08	NPLKXX08-*	5.62	6.21	2.31	NPLKJXX08-*
	10	NPLKXX10-*	6.12	6.71	2.81	NPLKJXX10-*
	C10	NPLKXXC10-*	6.62	7.21	2.81	NPLKJXXC10-*
	12	NPLKXX12-*	6.62	7.21	3.31	NPLKJXX12-*
	C12	NPLKXXC12-*	7.12	7.71	3.31	NPLKJXXC12-*
	14	NPLKXX14-*	7.12	7.71	3.81	NPLKJXX14-*
	C14	NPLKXXC14-*	7.62	8.21	3.81	NPLKJXXC14-*
	Dimensions with Long Cable Adapter					
	06	NPLKLXX06-*	7.62	8.21	1.81	NPLKLJXX06-*
	08	NPLKLXX08-*	7.87	8.46	2.31	NPLKLJXX08-*
	10	NPLKLXX10-*	8.37	8.96	2.81	NPLKLJXX10-*
	C10	NPLKLXXC10-*	8.87	9.46	2.81	NPLKLJXXC10-*
	12	NPLKLXX12-*	8.87	9.46	3.31	NPLKLJXX12-*
	C12	NPLKLXXC12-*	9.37	9.96	3.31	NPLKLJXXC12-*
	14	NPLKLXX14-*	9.12	9.71	3.81	NPLKLJXX14-*
	C14	NPLKLXXC14-*	9.62	10.21	3.81	NPLKLJXXC14-*

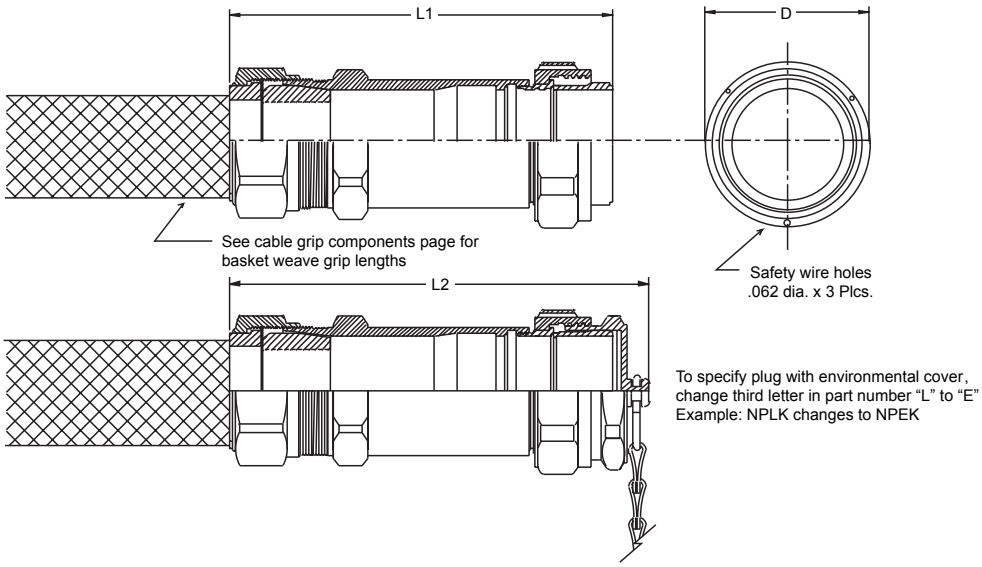

Types NPLD & NPED

Straight Plug with Standard Compression Nut and Environmental Cover

To specify a complete plug substitute the Dash number of the contact insert for the Asterisk (*) in the catalog number listed below.

Size Cable	Shell Size	Part No. with Std. Coupling Nut	Dimensions with Standard Cable Adapter L1	L2	D	Part No. with Jack Coupling Nut
Select from table on page 35 and substitute Symbol No. for XX	06	NPLDXX06-*	5.37	5.96	1.81	NPLDJXX06-*
	08	NPLDXX08-*	5.62	6.21	2.31	NPLDJXX08-*
	10	NPLDXX10-*	6.12	6.71	2.81	NPLDJXX10-*
	C10	NPLDXXC10-*	6.62	7.21	2.81	NPLDJXXC10-*
	12	NPLDXX12-*	6.62	7.21	3.31	NPLDJXX12-*
	C12	NPLDXXC12-*	7.12	7.71	3.31	NPLDJXXC12-*
	14	NPLDXX14-*	7.12	7.71	3.81	NPLDJXX14-*
	C14	NPLDXXC14-*	7.62	8.21	3.81	NPLDJXXC14-*
	Dimensions with Long Cable Adapter					
	06	NPLDLXX06-*	7.62	8.21	1.81	NPLDLJXX06-*
	08	NPLDLXX08-*	7.87	8.46	2.31	NPLDLJXX08-*
	10	NPLDLXX10-*	8.37	8.96	2.81	NPLDLJXX10-*
	C10	NPLDLXXC10-*	8.87	9.93	2.81	NPLDLJXXC10-*
	12	NPLDLXX12-*	8.87	9.93	3.31	NPLDLJXX12-*
	C12	NPLDLXXC12-*	9.37	9.96	3.31	NPLDLJXXC12-*
	14	NPLDLXX14-*	9.12	9.71	3.81	NPLDLJXX14-*
	C14	NPLDLXXC14-*	9.62	10.21	3.81	NPLDLJXXC14-*

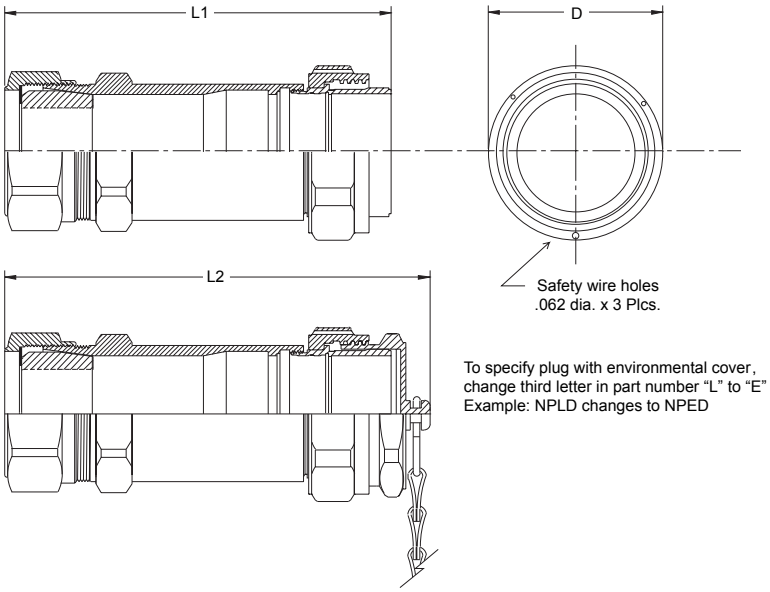

Types NPLT & NPET

Straight Plug with Conduit Adapter and Environmental Cover

To specify a complete plug substitute the Dash number of the contact insert for the Asterisk (*) in the catalog number listed below.

Shell Size	Conduit Size	Part No. with Std. Coupling Nut	Dimensions				Part No. with Jack Coupling Nut
			L1	L2	D1	D2	
06	¾	NPLT-2 06-*	4.25	4.84	1.81	¾	NPLTJ-2 06-*
08	1 ¼	NPLT-4 08-*	4.37	4.96	2.31	1 ¼	NPLTJ-4 08-*
10	1 ½	NPLT-5 10-*	4.50	5.09	2.81	1 ½	NPLTJ-5 10-*
C10	1 ½	NPLT-5 C10-*	5.00	5.59	2.81	1 ½	NPLTJ-5 C10-*
12	2	NPLT-6 12-*	4.62	5.21	3.31	2	NPLTJ-6 12-*
C12	2	NPLT-6 C12-*	5.12	5.71	3.31	2	NPLTJ-6 C12-*
14	2 ½	NPLT-7 14-*	5.09	5.68	3.81	2 ½	NPLTJ-7 14-*
C14	2 ½	NPLT-7 C14-*	5.59	6.18	3.81	2 ½	NPLTJ-7 C14-*

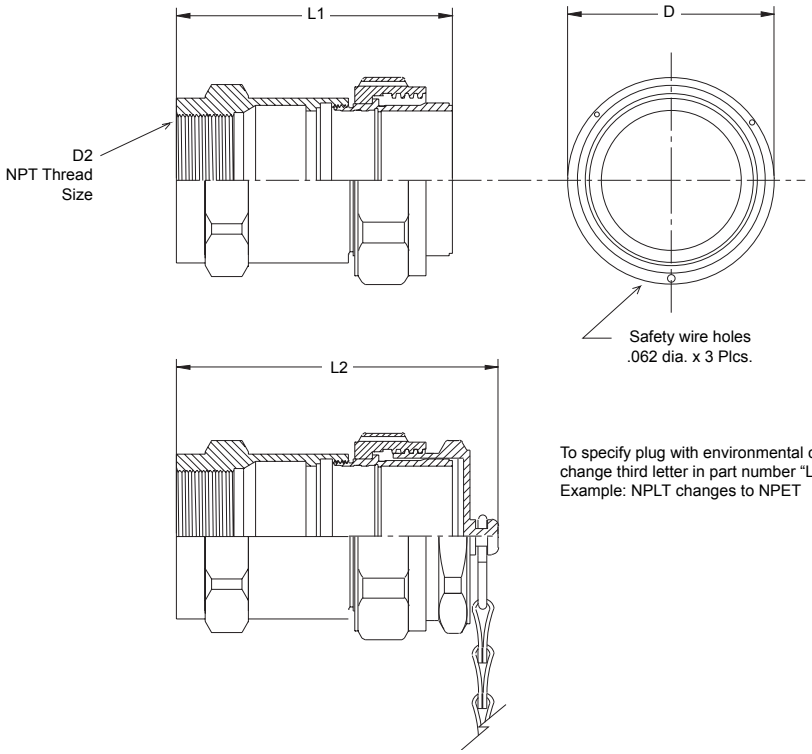

To specify plug with environmental cover, change third letter in part number "L" to "E"
Example: NPLT changes to NPET

Types NRLM & NREM

In-Line Receptacle with Mechanical Clamp Nut and Environmental Cover

To specify a complete plug substitute the Dash number of the contact insert for the Asterisk (*) in the catalog number listed below.

Size Cable	Shell Size	Part No.	L1	L2	S1	S2	S3	S4
			Dimensions with Standard Cable Adapter					
Select from table on page 35 and substitute Symbol No. for XX	06	NRLMXX06-*	6.12	6.75	1.75	1.95	1.75	2.37
	08	NRLMXX08-*	6.43	7.06	2.25	2.48	2.25	3.00
	10	NRLMXX10-*	7.00	7.62	2.75	3.03	2.75	3.75
	C10	NRLMXXC10-*	7.50	8.12	2.75	3.03	2.75	3.75
	12	NRLMXX12-*	7.56	8.18	3.25	3.56	3.25	4.50
	C12	NRLMXXC12-*	8.06	8.68	3.25	3.56	3.25	4.50
	14	NRLMXX14-*	8.12	8.75	3.75	4.06	3.75	5.12
	C14	NRLMXXC14-*	8.62	9.25	3.75	4.06	3.75	5.12
			Dimensions with Long Cable Adapter					
	06	NRLMLXX06-*	8.37	9.00	1.75	1.95	1.75	2.37
	08	NRLMLXX08-*	8.68	9.31	2.25	2.48	2.25	3.00
	10	NRLMLXX10-*	9.25	9.87	2.75	3.03	2.75	3.75
	C10	NRLMLXXC10-*	9.75	10.37	2.75	3.03	2.75	3.75
	12	NRLMLXX12-*	9.81	10.43	3.25	3.56	3.25	4.50
	C12	NRLMLXXC12-*	10.31	10.93	3.25	3.56	3.25	4.50
	14	NRLMLXX14-*	10.12	10.75	3.75	4.06	3.75	5.12
	C14	NRLMLXXC14-*	10.62	11.25	3.75	4.06	3.75	5.12

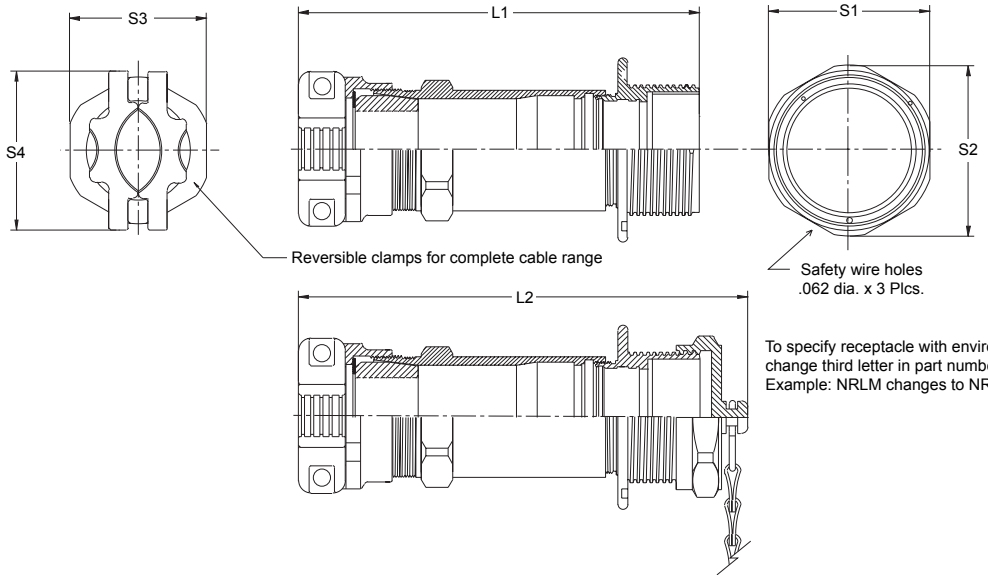

To specify receptacle with environmental cover, change third letter in part number "L" to "E"
Example: NRLM changes to NREM

Types NRLK & NREK

In-Line Receptacle with Basket Weave Grip and Environmental Cover

To specify a complete plug substitute the Dash number of the contact insert for the Asterisk (*) in the catalog number listed below.

Size Cable	Shell Size	Part No.	Dimensions with Standard Cable Adapter L1	L2	S1	S2
Select from table on page 35 and substitute Symbol No. for XX	06	NRLKXX06-*	5.37	6.00	1.75	1.95
	08	NRLKXX08-*	5.62	6.25	2.25	2.48
	10	NRLKXX10-*	6.12	6.75	2.75	3.03
	C10	NRLKXXC10-*	6.62	7.25	2.75	3.03
	12	NRLKXX12-*	6.62	7.25	3.25	3.56
	C12	NRLKXXC12-*	7.12	7.75	3.25	3.56
	14	NRLKXX14-*	7.12	7.75	3.75	4.06
	C14	NRLKXXC14-*	7.62	8.25	3.75	4.06
			Dimensions with Long Cable Adapter			
	06	NRLKLXX06-*	7.62	8.25	1.75	1.95
	08	NRLKLXX08-*	7.87	8.50	2.25	2.48
	10	NRLKLXX10-*	8.37	9.00	2.75	3.03
	C10	NRLKLXXC10-*	8.87	9.50	2.75	3.03
	12	NRLKLXX12-*	8.87	9.50	3.25	3.56
	C12	NRLKLXXC12-*	9.37	10.00	3.25	3.56
	14	NRLKLXX14-*	9.12	9.75	3.75	4.06
	C14	NRLKLXXC14-*	9.62	10.25	3.75	4.06

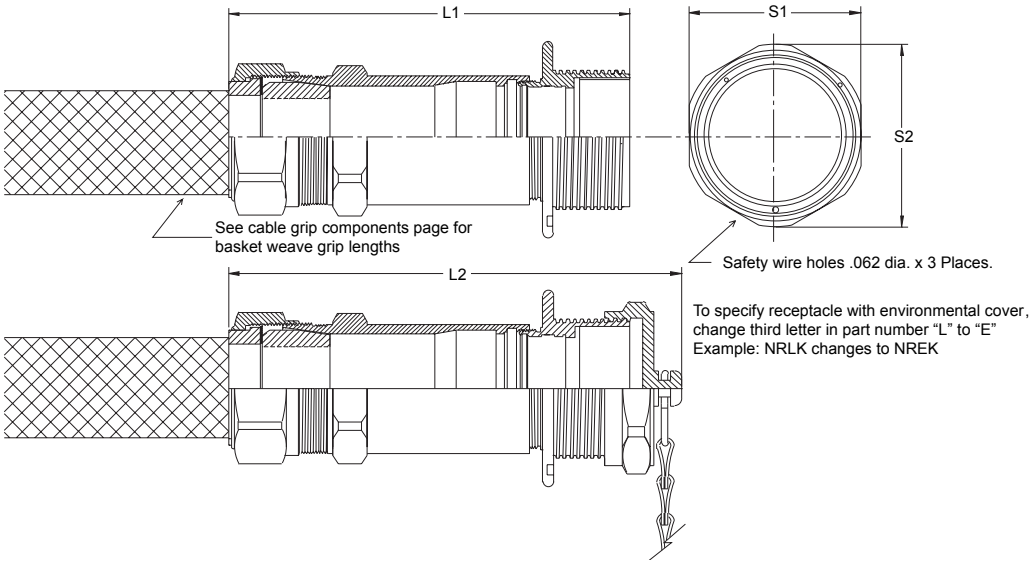

Types NRLD & NRED

In-Line Receptacle with Standard Compression Nut

To specify a complete plug substitute the Dash number of the contact insert for the Asterisk (*) in the catalog number listed below.

Size Cable	Shell Size	Part No.	Dimensions with Standard Cable Adapter L1	L2	S1	S2
Select from table on page 35 and substitute Symbol No. for XX	06	NRLDXX06-*	5.37	6.00	1.75	1.95
	08	NRLDXX08-*	5.62	6.25	2.25	2.48
	10	NRLDXX10-*	6.12	6.75	2.75	3.03
	C10	NRLDXXC10-*	6.62	7.25	2.75	3.03
	12	NRLDXX12-*	6.62	7.25	3.25	3.56
	C12	NRLDXXC12-*	7.12	7.75	3.25	3.56
	14	NRLDXX14-*	7.12	7.75	3.75	4.06
	C14	NRLDXXC14-*	7.62	8.25	3.75	4.06
			Dimensions with Long Cable Adapter			
	06	NRLDLXX06-*	7.62	8.25	1.75	1.95
	08	NRLDLXX08-*	7.87	8.50	2.25	2.48
	10	NRLDLXX10-*	8.37	9.00	2.75	3.03
	C10	NRLDLXXC10-*	8.87	9.50	2.75	3.03
	12	NRLDLXX12-*	8.87	9.50	3.25	3.56
	C12	NRLDLXXC12-*	9.37	10.00	3.25	3.56
	14	NRLDLXX14-*	9.12	9.75	3.75	4.06
	C14	NRLDLXXC14-*	9.62	10.25	3.75	4.06

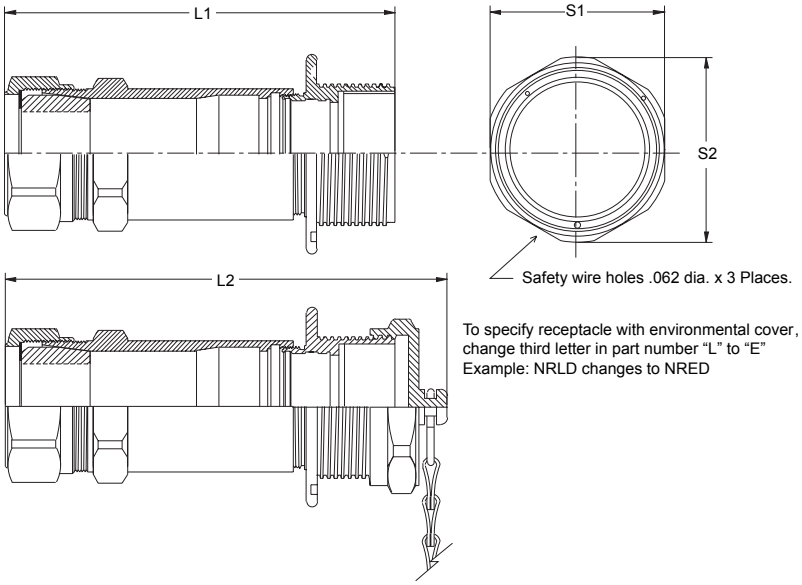

Types NRLT & NRET

In-Line Receptacle with Conduit Adapter and Environmental Cover

To specify a complete plug substitute the Dash number of the contact insert for the Asterisk (*) in the catalog number listed below.

Shell Size	Conduit Size	Part No.	Dimensions L1	L2	D	S1	S2
06	¾	NRLT-2 06-*	4.25	4.87	¾	1.37	1.95
08	1 ¼	NRLT-4 08-*	4.37	5.00	1 ¼	2.25	2.48
10	1 ½	NRLT-5 10-*	4.50	5.12	1 ½	2.75	3.03
C10	1 ½	NRLT-5 C10-*	5.00	5.62	1 ½	2.75	3.03
12	2	NRLT-6 12-*	4.62	5.25	2	3.25	3.56
C12	2	NRLT-6 C12-*	5.12	5.75	2	3.25	3.56
14	2 ½	NRLT-7 14-*	5.09	5.71	2 ½	3.75	4.06
C14	2 ½	NRLT-7 C14-*	5.59	6.21	2 ½	3.75	4.06

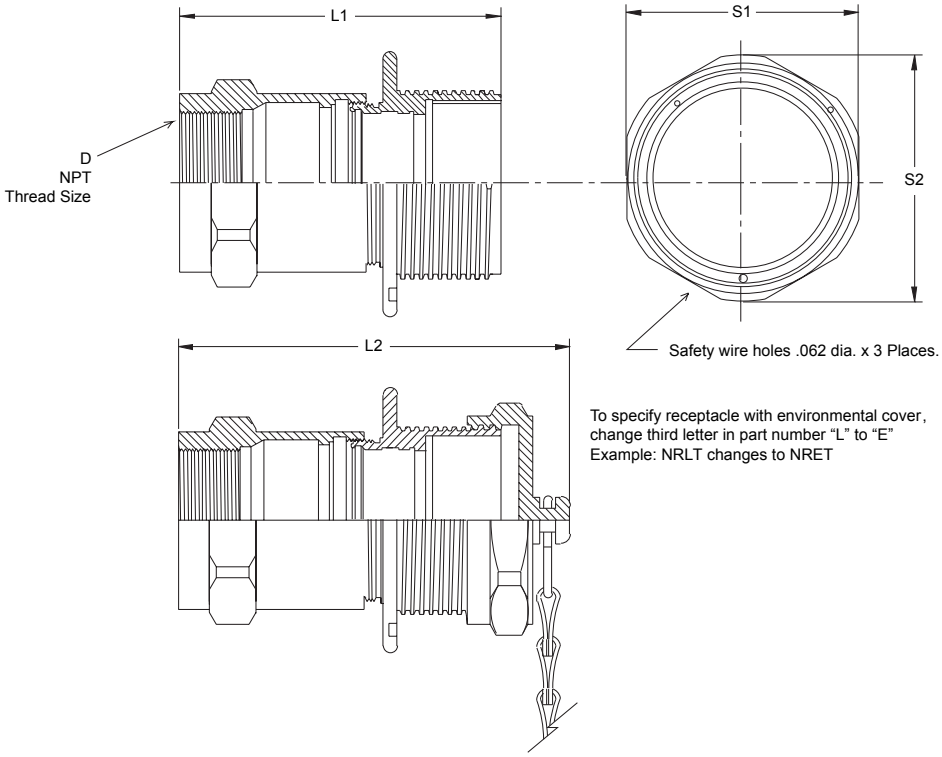

Types NRLP, NRCP & NREP

Square Flange Panel Mount Receptacle with Environmental Cover

To specify a complete plug substitute the Dash number of the contact insert for the Asterisk (*) in the catalog number listed below.

Shell Size	Part No.	Dimensions									
		L1	L2	L3	L4	L5	D1	D2	D3	S1	S2
06	NRLP0006-*	2.93	1.00	2.93	0.25	2.12	1.50	1.34	0.17	1.75	1.37
08	NRLP0008-*	2.32	1.00	2.93	0.25	2.12	2.00	1.84	0.20	2.25	1.68
10	NRLP0010-*	2.32	1.00	2.93	0.25	2.18	2.50	2.34	0.21	2.75	2.09
C10	NRLP00C10-*	2.82	1.50	2.43	0.75	2.68	2.50	2.34	0.21	2.75	2.09
12	NRLP0012-*	2.32	1.00	2.93	0.25	2.18	3.00	2.84	0.28	3.25	2.53
C12	NRLP00C12-*	2.82	1.50	2.43	0.75	2.68	3.00	2.84	0.28	3.25	2.53
14	NRLP0014-*	2.32	1.00	2.93	0.25	2.18	3.50	3.34	0.34	3.75	3.03
C14	NRLP00C14-*	2.82	1.50	2.43	0.75	2.68	3.50	3.34	0.34	3.75	3.03

Note - Square Flange Receptacles have an open back and can be used with or without Potting Sleeves.

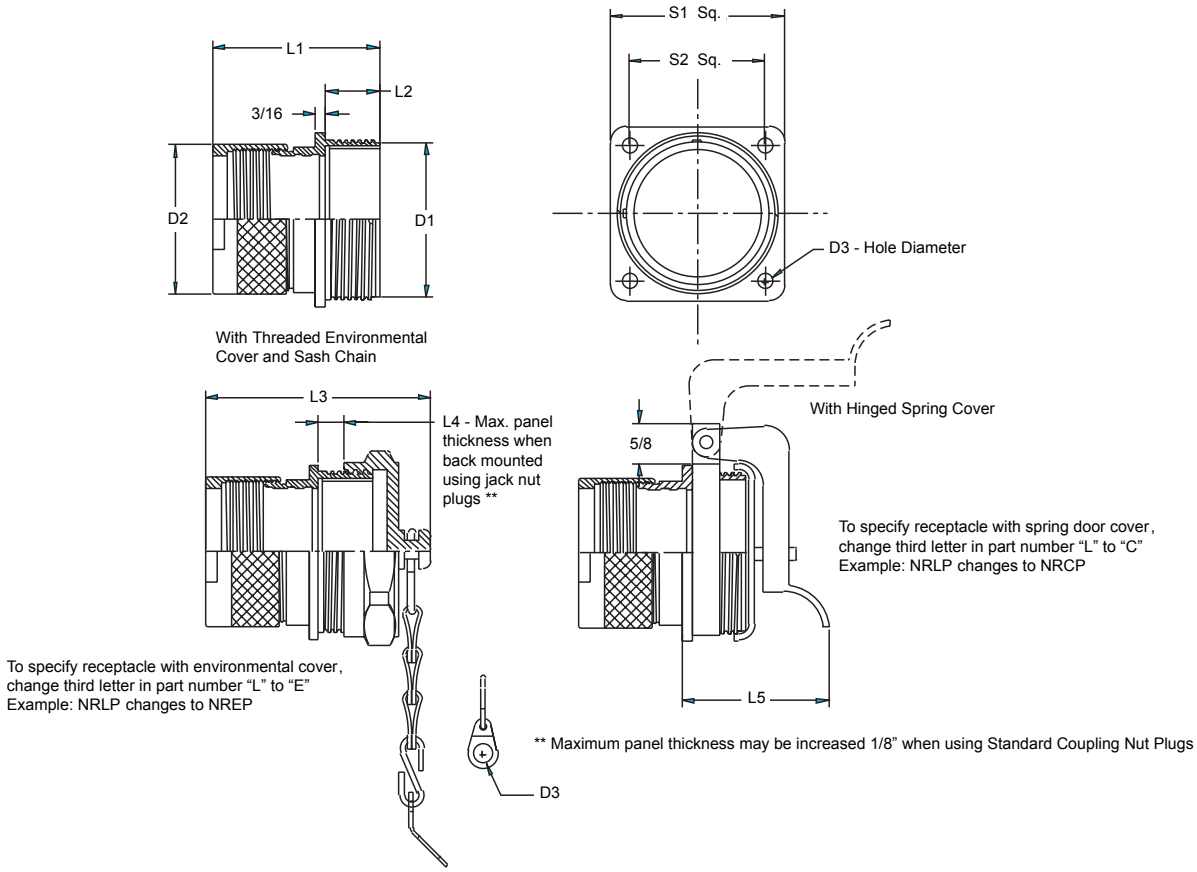

Insert Configuration Index

Insert Arrangement	Total Contacts	Crimp	Solder	Pressure	Service Rating	Contact Size 18	16	12	10	8	4	1/0	4/0	350 MCM	500 MCM	Page No.
CN-06-327	3	X			D			3								16
CN-06-314	4	X			D				4							16
CN-06-316	4	X			D				4							16
CN-06-322	4	X			D				4							16
CN-06-22	4			X	D				4							16
CN-06-333	4	X			D		4									17
CN-08-328	4	X			D					4						17
CN-08-22	4		X	X	D						4					17
CN-08-38	4		X	X	D						4					17
CN-C10-40	4		X	X	D							4				18
CN-C10-42	4		X		D							4				18
CN-C12-26	4		X		D								4			18
CN-C12-38	4		X	X	D								4			18
CN-06-324	5	X			D			5								19
CN-06-353	5	X			D			5								19
CN-08-316	5	X			D					5						19
CN-08-375	5	X			D					5						19
CN-10-38	5		X		D						5					20
CN-10-84	5		X		D						5					20
CN-C12-49	5			X	E							5				20
CN-C12-72	6		X		D			3					3			20
CN-06-310	7	X			A			7								21
CN-06-354	7	X			A			7								21
CN-06-348	7	X			A		7									21
CN-10-359	7	X			D					7						21
CN-C12-353	8	X			A/B			4				4				22
CN-12-355	8	X			D						4	4				22
CN-C14-21	8		X		D/E			4						4		22
CN-C14-43	8		X		D/E			4						4		23
CN-06-355	10	X			A		10									23
CN-06-334	10	X			A		10									23
CN-08-376	10	X			D			6	4							23
CN-08-381	10	X			D			6	4							24
CN-C12-375	10	X			D			6				4				24
CN-10-375	12	X			D				12							24
CN-08-325	16	X			D		16									24
CN-08-312	19	X			A			19								25
CN-08-377	19	X			A			19								25
CN-08-355	19	X			A		19									25
CN-10-376	19	X			D			19								25
CN-10-388	19	X			D			19								26
CN-10-332	20	X			A			20								26
CN-10-387	20	X			A			20								26
CN-08-335	27	X			A		24	3								26
CN-10-374	27	X			D/A			25			2					27
CN-08-321	37	X			A		37									27
CN-10-350	37	X			A			37								27
CN-10-386	37	X			A			37								27
CN-12-371	37	X			D		37									28
CN-14-339	42	X			D			42								28
CN-12-352	58	X			A			58								28
CN-12-384	58	X			A			58								29
CN-10-313	68	X			A		68									29

Insert Configurations

Additional insert configurations are available upon request, consult the factory for more information.

3 Contacts

Part Number	Shell Size	Insert Type	No. of Contacts	Size AWG	Wire Terminal Type	Service Voltage Rating
CN-06-327PN CN-06-327SN	06	Pin Socket	3	12	Crimp	D

Front view of male insert

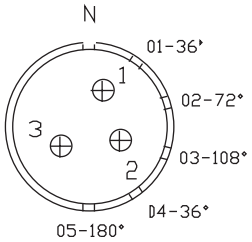

4 Contacts

Part Number	Shell Size	Insert Type	No. of Contacts	Size AWG	Wire Terminal Type	Service Voltage Rating
CN-06-314PN CN-06-314SN	06	Pin Socket	4	10	Crimp	D

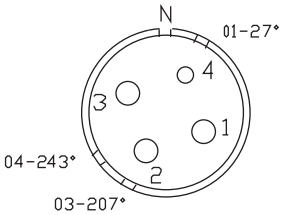

Part Number	Shell Size	Insert Type	No. of Contacts	Size AWG	Wire Terminal Type	Service Voltage Rating
CN-06-316PN CN-06-316SN	06	Pin Socket	4	10	Crimp	D

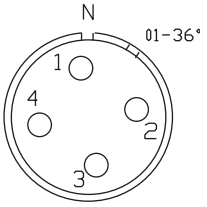

Part Number	Shell Size	Insert Type	No. of Contacts	Size AWG	Wire Terminal Type	Service Voltage Rating
CN-06-322PN CN-06-322SN	06	Pin Socket	4	10	Crimp	D
CN-06-22PR CN-06-22SR	06	Pin Socket	4	10	Pressure	D

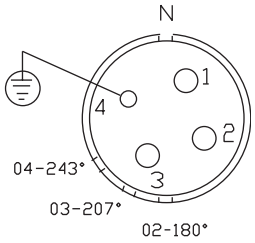

CONTACTS SYMBOLS	○	●	⊕	○	◉	◉	⊕	△	□	○
AWG	18	16	12	10	8	4	1/0	4/0	350 MCM	500 MCM

GROUND	CONTACT	TERMINATION
CRIMP	SOLDER	PRESSURE

Service Voltage Rating: A = 240V, B,D & E = 600V

Insert Configurations

Additional insert configurations are available upon request, consult the factory for more information.

4 Contacts

Front view of male insert

Part Number	Shell Size	Insert Type	No. of Contacts	Size AWG	Wire Terminal Type	Service Voltage Rating
CN-06-333PN CN-06-333SN	06	Pin Socket	4	16	Crimp	D

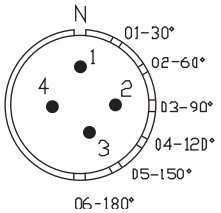

Part Number	Shell Size	Insert Type	No. of Contacts	Size AWG	Wire Terminal Type	Service Voltage Rating
CN-08-328PN CN-08-328SN	08	Pin Socket	4	8	Crimp	D

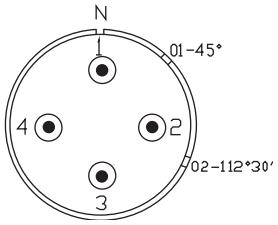

Part Number	Shell Size	Insert Type	No. of Contacts	Size AWG	Wire Terminal Type	Service Voltage Rating
CN-08-22P CN-08-22S	08	Pin Socket	4	4	Solder	D
CN-08-22PR CN-08-22SR	08	Pin Socket	4	4	Pressure	D

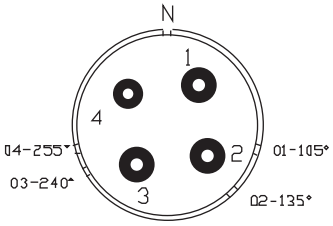

Part Number	Shell Size	Insert Type	No. of Contacts	Size AWG	Wire Terminal Type	Service Voltage Rating
CN-08-38P CN-08-38S	08	Pin Socket	4	4	Solder	D
CN-08-38PR CN-08-38SR	08	Pin Socket	4	4	Pressure	D

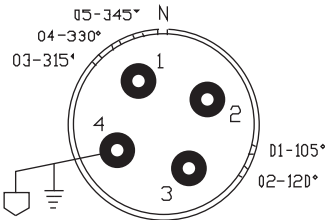

CONTACTS SYMBOLS	○	●	⊕	○	⊙	◉	⊕	△	□	○
AWG	18	16	12	10	8	4	1/0	4/0	350 MCM	500 MCM

GROUND	CONTACT	TERMINATION
CRIMP	SOLDER	PRESSURE

Service Voltage Rating: A = 240V, B,D & E = 600V

Insert Configurations

Additional insert configurations are available upon request, consult the factory for more information.

4 Contacts

Front view of male insert

Part Number	Shell Size	Insert Type	No. of Contacts	Size AWG	Wire Terminal Type	Service Voltage Rating
CN-C10-40P CN-C10-40S	C10	Pin Socket	4	1/0	Solder	D
CN-C10-40PR CN-C10-40SR	C10	Pin Socket	4	1/0	Pressure	D

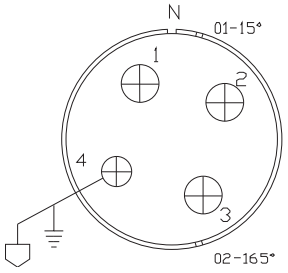

Part Number	Shell Size	Insert Type	No. of Contacts	Size AWG	Wire Terminal Type	Service Voltage Rating
CN-C10-42P CN-C10-42S	C10	Pin Socket	4	1/0	Solder	D

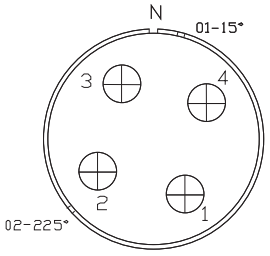

Part Number	Shell Size	Insert Type	No. of Contacts	Size AWG	Wire Terminal Type	Service Voltage Rating
CN-C12-26P CN-C12-26S	C12	Pin Socket	4	4/0	Solder	D

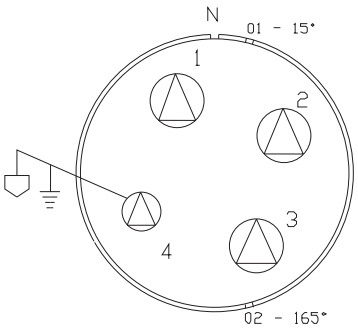

Part Number	Shell Size	Insert Type	No. of Contacts	Size AWG	Wire Terminal Type	Service Voltage Rating
CN-C12-38P CN-C12-38S	C12	Pin Socket	4	4/0	Solder	D
CN-C12-38PR CN-C12-38SR	C12	Pin Socket	4	4/0	Pressure	D

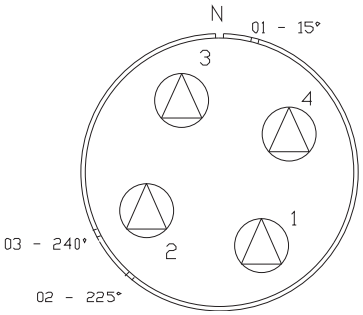

CONTACTS SYMBOLS	○	●	⊕	○	◉	◉	⊕	△	□	○
AWG	18	16	12	10	8	4	1/0	4/0	350 MCM	500 MCM

GROUND	CONTACT	TERMINATION
CRIMP	SOLDER	PRESSURE

Service Voltage Rating: A = 240V, B,D & E = 600V

Insert Configurations

Additional insert configurations are available upon request, consult the factory for more information.

5 Contacts

Front view of male insert

Part Number	Shell Size	Insert Type	No. of Contacts	Size AWG	Wire Terminal Type	Service Voltage Rating
CN-06-324PN CN-06-324SN	06	Pin Socket	5	12	Crimp	D

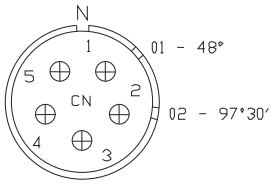

Part Number	Shell Size	Insert Type	No. of Contacts	Size AWG	Wire Terminal Type	Service Voltage Rating
CN-06-353PN CN-06-353SN	06	Pin Socket	5	12	Crimp	D

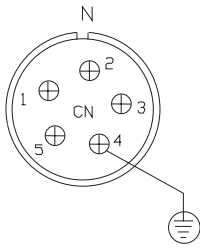

Part Number	Shell Size	Insert Type	No. of Contacts	Size AWG	Wire Terminal Type	Service Voltage Rating
CN-08-316PN CN-08-316SN	08	Pin Socket	5	8	Crimp	D

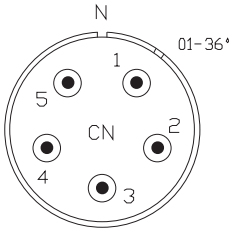

Part Number	Shell Size	Insert Type	No. of Contacts	Size AWG	Wire Terminal Type	Service Voltage Rating
CN-08-375PN CN-08-375SN	08	Pin Socket	5	8	Crimp	D

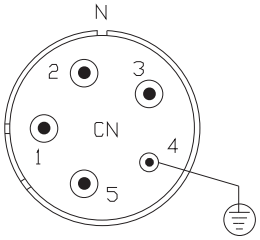

CONTACTS SYMBOLS	○	●	⊕	○	⊙	◉	⊕	△	□	○
AWG	18	16	12	10	8	4	1/0	4/0	350 MCM	500 MCM

Service Voltage Rating: A = 240V, B,D & E = 600V

GROUND	CONTACT	TERMINATION
CRIMP	SOLDER	PRESSURE

Insert Configurations

Additional insert configurations are available upon request, consult the factory for more information.

5 Contacts

Part Number	Shell Size	Insert Type	No. of Contacts	Size AWG	Wire Terminal Type	Service Voltage Rating
CN-10-38P CN-10-38S	10	Pin Socket	5	4	Solder	D

Front view of male insert

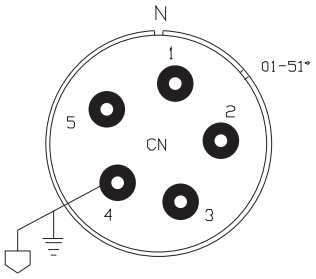

Part Number	Shell Size	Insert Type	No. of Contacts	Size AWG	Wire Terminal Type	Service Voltage Rating
CN-10-84P CN-10-84S	10	Pin Socket	5	4	Solder	D

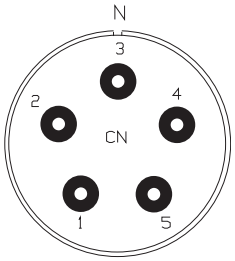

Part Number	Shell Size	Insert Type	No. of Contacts	Size AWG	Wire Terminal Type	Service Voltage Rating
CN-C12-49PR CN-C12-49SR	C12	Pin Socket	5	1/0	Pressure	E

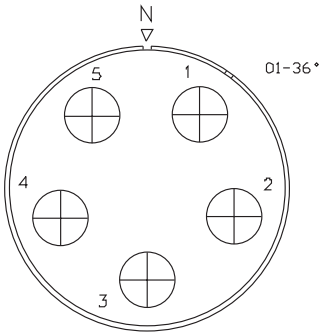

6 Contacts

Part Number	Shell Size	Insert Type	No. of Contacts	Size AWG	Wire Terminal Type	Service Voltage Rating
CN-C12-72P CN-C12-72S	C12	Pin Socket	3 3	4/0 12	Solder	D

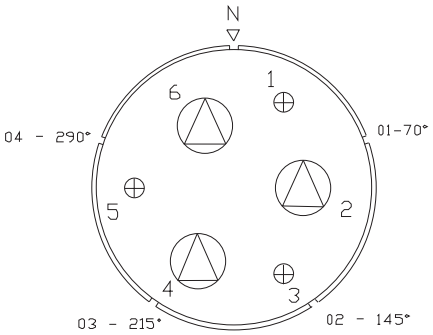

CONTACTS SYMBOLS	○	●	⊕	○	⊙	◉	⊕	△	□	○
AWG	18	16	12	10	8	4	1/0	4/0	350 MCM	500 MCM

GROUND	CONTACT	TERMINATION
CRIMP	SOLDER	PRESSURE

Service Voltage Rating: A = 240V, B,D & E = 600V

Insert Configurations

Additional insert configurations are available upon request, consult the factory for more information.

7 Contacts

Part Number	Shell Size	Insert Type	No. of Contacts	Size AWG	Wire Terminal Type	Service Voltage Rating
CN-06-310PN CN-06-310SN	06	Pin Socket	7	12	Crimp	A

Front view of male insert

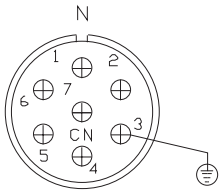

Part Number	Shell Size	Insert Type	No. of Contacts	Size AWG	Wire Terminal Type	Service Voltage Rating
CN-06-354PN CN-06-354SN	06	Pin Socket	7	12	Crimp	A

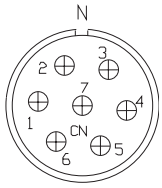

Part Number	Shell Size	Insert Type	No. of Contacts	Size AWG	Wire Terminal Type	Service Voltage Rating
CN-06-348PN CN-06-348SN	06	Pin Socket	7	16	Crimp	A

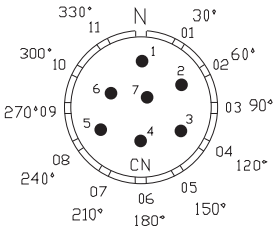

Part Number	Shell Size	Insert Type	No. of Contacts	Size AWG	Wire Terminal Type	Service Voltage Rating
CN-10-359PN CN-10-359SN	10	Pin Socket	7	8	Crimp	D

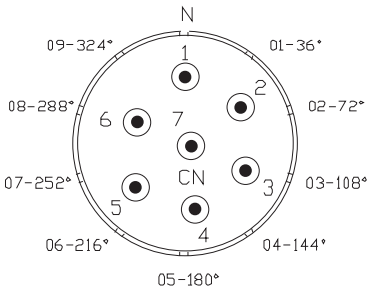

CONTACTS SYMBOLS	○	●	⊕	○	⊙	◉	⊕	△	□	○
AWG	18	16	12	10	8	4	1/0	4/0	350 MCM	500 MCM

GROUND	CONTACT	TERMINATION
CRIMP	SOLDER	PRESSURE

Service Voltage Rating: A = 240V, B,D & E = 600V

Insert Configurations

Additional insert configurations are available upon request, consult the factory for more information.

8 Contacts

Part Number	Shell Size	Insert Type	No. of Contacts	Size AWG	Wire Terminal Type	Service Voltage Rating
CN-C12-353PN	C12	Pin	4 4	12 1/0	Crimp	A B
CN-C12-353SN		Socket				

Front view of male insert

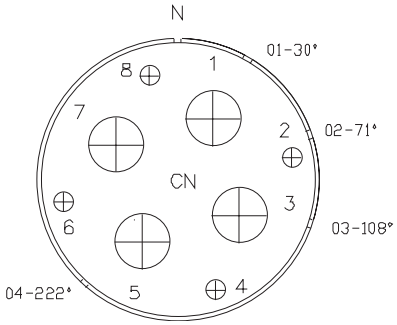

Part Number	Shell Size	Insert Type	No. of Contacts	Size AWG	Wire Terminal Type	Service Voltage Rating
CN-12-355PN	12	Pin	4 4	4 1/0	Crimp	D
CN-12-355SN		Socket				

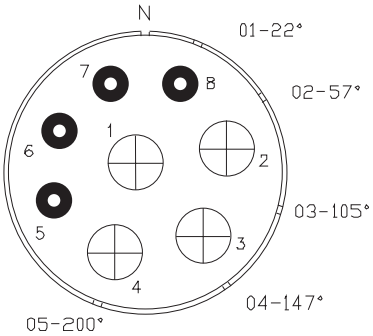

Part Number	Shell Size	Insert Type	No. of Contacts	Size AWG	Wire Terminal Type	Service Voltage Rating
CN-C14-21P	C14	Pin	4 4	350 MCM 12 Relay	Solder	D E
CN-C14-21S		Socket				

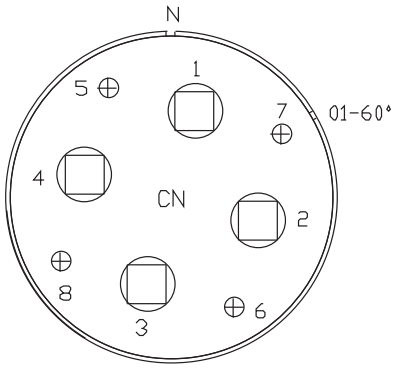

CONTACTS SYMBOLS	○	●	⊕	○	⊙	◉	⊕	△	□	○
AWG	18	16	12	10	8	4	1/0	4/0	350 MCM	500 MCM

GROUND	CONTACT	TERMINATION
CRIMP	SOLDER	PRESSURE

Service Voltage Rating: A = 240V, B,D & E = 600V

Insert Configurations

Additional insert configurations are available upon request, consult the factory for more information.

8 Contacts

Part Number	Shell Size	Insert Type	No. of Contacts	Size AWG	Wire Terminal Type	Service Voltage Rating
CN-C14-43P	C14	Pin	4 4	350 MCM 12 Relay	Solder	D E
CN-C14-43S		Socket				

Front view of male insert

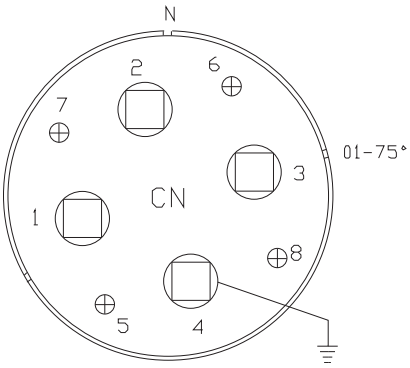

10 Contacts

Part Number	Shell Size	Insert Type	No. of Contacts	Size AWG	Wire Terminal Type	Service Voltage Rating
CN-06-355PN CN-06-355SN	06	Pin Socket	10	16	Crimp	A

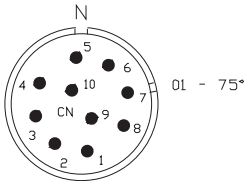

Part Number	Shell Size	Insert Type	No. of Contacts	Size AWG	Wire Terminal Type	Service Voltage Rating
CN-06-334PN CN-06-334SN	06	Pin Socket	10	16	Crimp	A

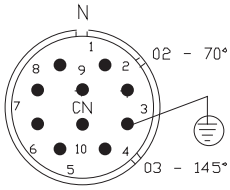

Part Number	Shell Size	Insert Type	No. of Contacts	Size AWG	Wire Terminal Type	Service Voltage Rating
CN-08-376PN	08	Pin	4 6	10 12	Crimp	D
CN-08-376SN		Socket				

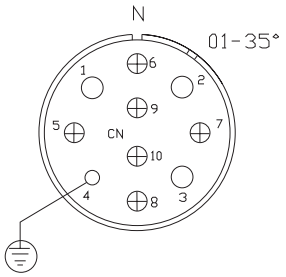

CONTACTS SYMBOLS	○	●	⊕	○	◉	◉	⊕	△	□	○
AWG	18	16	12	10	8	4	1/0	4/0	350 MCM	500 MCM

GROUND	CONTACT	TERMINATION
CRIMP	SOLDER	PRESSURE

Service Voltage Rating: A = 240V, B,D & E = 600V

Insert Configurations

Additional insert configurations are available upon request, consult the factory for more information.

10 Contacts

Part Number	Shell Size	Insert Type	No. of Contacts	Size AWG	Wire Terminal Type	Service Voltage Rating
CN-08-381PN	08	Pin	4 6	10 12	Crimp	D
CN-08-381SN		Socket				

Front view of male insert

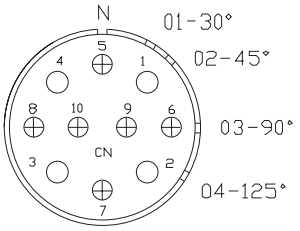

Part Number	Shell Size	Insert Type	No. of Contacts	Size AWG	Wire Terminal Type	Service Voltage Rating
CN-C12-375PN	C12	Pin	4 6	1/0 12	Crimp	D
CN-C12-375SN		Socket				

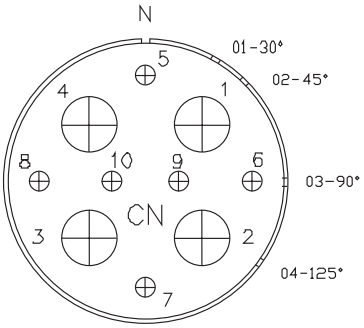

12 Contacts

Part Number	Shell Size	Insert Type	No. of Contacts	Size AWG	Wire Terminal Type	Service Voltage Rating
CN-10-375PN CN-10-375SN	10	Pin Socket	12	10	Crimp	D

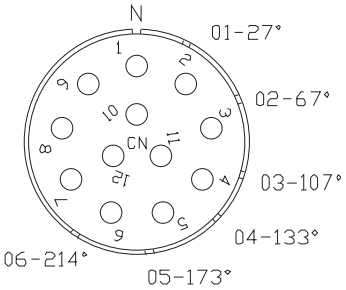

16 Contacts

Part Number	Shell Size	Insert Type	No. of Contacts	Size AWG	Wire Terminal Type	Service Voltage Rating
CN-08-325PN CN-08-325SN	08	Pin Socket	16	16	Crimp	D

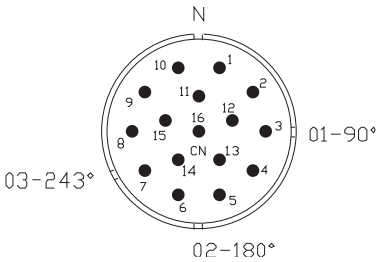

CONTACTS SYMBOLS	○	●	⊕	○	⊙	◉	⊕	△	□	○
AWG	18	16	12	10	8	4	1/0	4/0	350 MCM	500 MCM

GROUND	CONTACT	TERMINATION
CRIMP	SOLDER	PRESSURE

Service Voltage Rating: A = 240V, B,D & E = 600V

Insert Configurations

Additional insert configurations are available upon request, consult the factory for more information.

19 Contacts

Front view of male insert

Part Number	Shell Size	Insert Type	No. of Contacts	Size AWG	Wire Terminal Type	Service Voltage Rating
CN-08-312PN CN-08-312SN	08	Pin Socket	19	12	Crimp	A

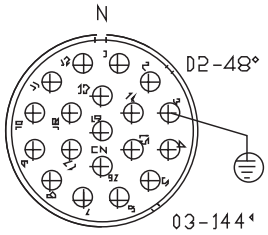

Part Number	Shell Size	Insert Type	No. of Contacts	Size AWG	Wire Terminal Type	Service Voltage Rating
CN-08-377PN CN-08-377SN	08	Pin Socket	19	12	Crimp	A

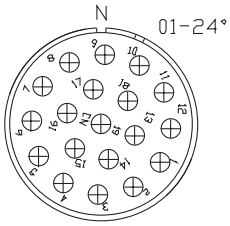

Part Number	Shell Size	Insert Type	No. of Contacts	Size AWG	Wire Terminal Type	Service Voltage Rating
CN-08-355PN CN-08-355SN	08	Pin Socket	19	16	Crimp	A

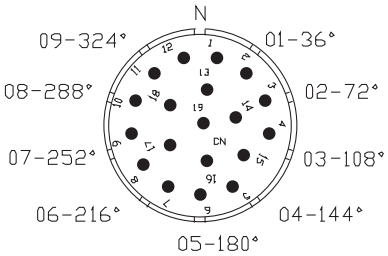

Part Number	Shell Size	Insert Type	No. of Contacts	Size AWG	Wire Terminal Type	Service Voltage Rating
CN-10-376PN CN-10-376SN	10	Pin Socket	19	12	Crimp	D

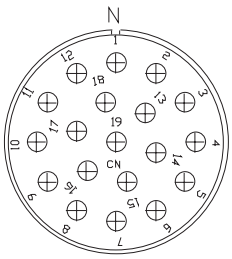

CONTACTS SYMBOLS	○	●	⊕	○	⊙	◉	⊕	△	□	○
AWG	18	16	12	10	8	4	1/0	4/0	350 MCM	500 MCM

GROUND	CONTACT	TERMINATION
CRIMP	SOLDER	PRESSURE

Service Voltage Rating: A = 240V, B,D & E = 600V

Insert Configurations

Additional insert configurations are available upon request, consult the factory for more information.

19 Contacts

Part Number	Shell Size	Insert Type	No. of Contacts	Size AWG	Wire Terminal Type	Service Voltage Rating
CN-10-388PN CN-10-388SN	10	Pin Socket	19	12	Crimp	D

Front view of male insert

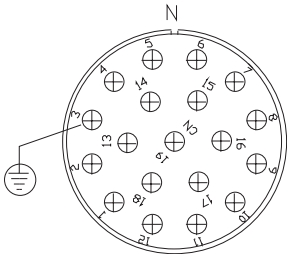

20 Contacts

Part Number	Shell Size	Insert Type	No. of Contacts	Size AWG	Wire Terminal Type	Service Voltage Rating
CN-10-332PN CN-10-332SN	10	Pin Socket	20	12	Crimp	A

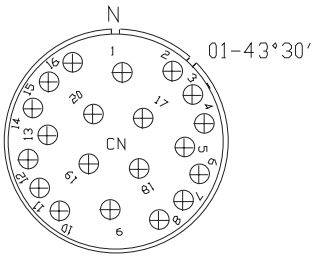

Part Number	Shell Size	Insert Type	No. of Contacts	Size AWG	Wire Terminal Type	Service Voltage Rating
CN-10-387PN CN-10-387SN	10	Pin Socket	20	12	Crimp	A

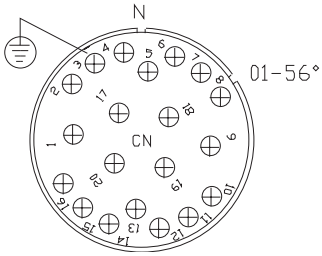

27 Contacts

Part Number	Shell Size	Insert Type	No. of Contacts	Size AWG	Wire Terminal Type	Service Voltage Rating
CN-08-335PN CN-08-335SN	08	Pin Socket	3 24	12 16	Crimp	A

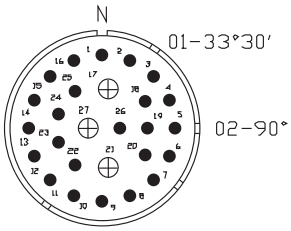

CONTACTS SYMBOLS	○	●	⊕	○	⊙	◉	⊕	△	□	○
AWG	18	16	12	10	8	4	1/0	4/0	350 MCM	500 MCM

GROUND	CONTACT	TERMINATION
CRIMP	SOLDER	PRESSURE

Service Voltage Rating: A = 240V, B,D & E = 600V

Insert Configurations

Additional insert configurations are available upon request, consult the factory for more information.

27 Contacts

Part Number	Shell Size	Insert Type	No. of Contacts	Size AWG	Wire Terminal Type	Service Voltage Rating
CN-10-374PN	10	Pin	2 25	4 12	Crimp	D A
CN-10-374SN		Socket				

Front view of male insert

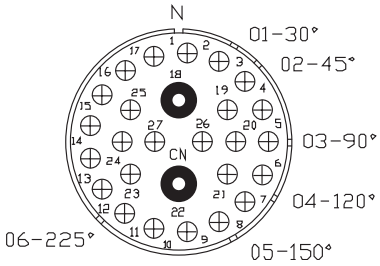

37 Contacts

Part Number	Shell Size	Insert Type	No. of Contacts	Size AWG	Wire Terminal Type	Service Voltage Rating
CN-08-321PN CN-08-321SN	08	Pin Socket	37	16	Crimp	A

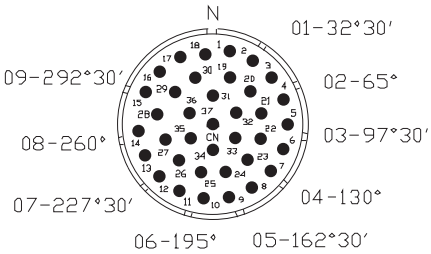

Part Number	Shell Size	Insert Type	No. of Contacts	Size AWG	Wire Terminal Type	Service Voltage Rating
CN-10-350PN CN-10-350SN	10	Pin Socket	37	12	Crimp	A

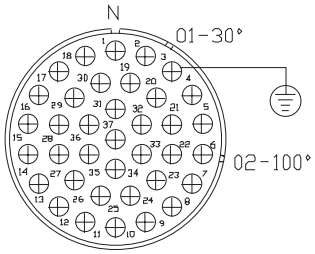

Part Number	Shell Size	Insert Type	No. of Contacts	Size AWG	Wire Terminal Type	Service Voltage Rating
CN-10-386PN CN-10-386SN	10	Pin Socket	37	12	Crimp	A

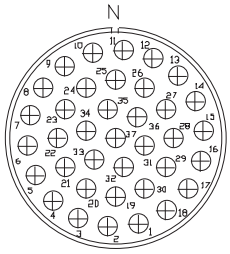

CONTACTS SYMBOLS	○	●	⊕	○	⊙	◉	⊕	△	□	○
AWG	18	16	12	10	8	4	1/0	4/0	350 MCM	500 MCM

Service Voltage Rating: A = 240V, B,D & E = 600V

GROUND	CONTACT	TERMINATION
CRIMP	SOLDER	PRESSURE

Insert Configurations

Additional insert configurations are available upon request, consult the factory for more information.

37 Contacts

Part Number	Shell Size	Insert Type	No. of Contacts	Size AWG	Wire Terminal Type	Service Voltage Rating
CN-12-371PN CN-12-371SN	12	Pin Socket	37	16	Crimp	D

Front view of male insert

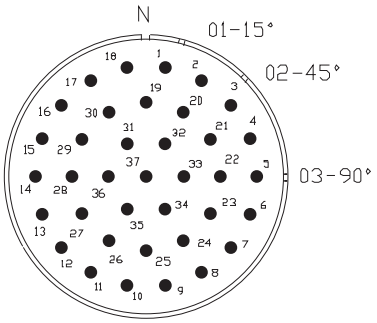

42 Contacts

Part Number	Shell Size	Insert Type	No. of Contacts	Size AWG	Wire Terminal Type	Service Voltage Rating
CN-14-339PN CN-14-339SN	14	Pin Socket	42	12	Crimp	D

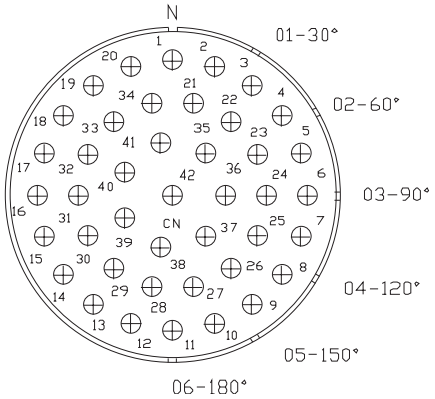

58 Contacts

Part Number	Shell Size	Insert Type	No. of Contacts	Size AWG	Wire Terminal Type	Service Voltage Rating
CN-12-352PN CN-12-352SN	12	Pin Socket	58	12	Crimp	A

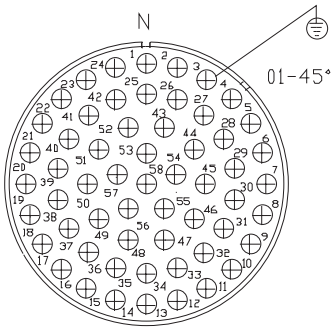

CONTACTS SYMBOLS	○	●	⊕	○	⊙	◉	⊕	△	□	○
AWG	18	16	12	10	8	4	1/0	4/0	350 MCM	500 MCM

GROUND	CONTACT	TERMINATION
CRIMP	SOLDER	PRESSURE

Service Voltage Rating: A = 240V, B,D & E = 600V

Insert Configurations

Additional insert configurations are available upon request, consult the factory for more information.

58 Contacts

Part Number	Shell Size	Insert Type	No. of Contacts	Size AWG	Wire Terminal Type	Service Voltage Rating
CN-12-384PN CN-12-384SN	12	Pin Socket	58	12	Crimp	A

Front view of male insert

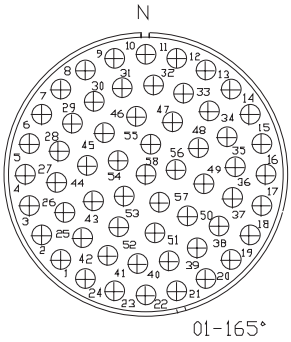

68 Contacts

Part Number	Shell Size	Insert Type	No. of Contacts	Size AWG	Wire Terminal Type	Service Voltage Rating
CN-10-313PN CN-10-313SN	10	Pin Socket	68	16	Crimp	A

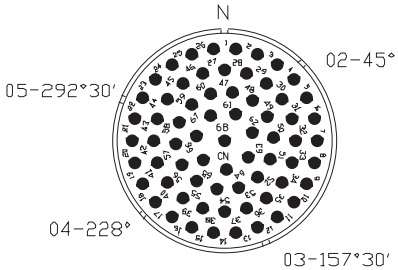

CONTACTS SYMBOLS	○	●	⊕	○	⊙	◉	⊕	△	□	○
AWG	18	16	12	10	8	4	1/0	4/0	350 MCM	500 MCM

GROUND	CONTACT	TERMINATION
CRIMP	SOLDER	PRESSURE

Service Voltage Rating: A = 240V, B,D & E = 600V

Connector Components & Accessories

Straight Plug Shell

Shell Size	Part Number	Dimensions D	Dimensions L
06	CN-W-1306N	1.25	2.010
08	CN-W-1308N	1.75	2.010
10	CN-W-1310N	2.25	2.010
C10	CN-C-1310N	2.25	2.510
12	CN-W-1312N	2.75	2.010
C12	CN-C-1312N	2.75	2.510
14	CN-W-1314N	3.25	2.010
C14	CN-C-1314N	3.25	2.510

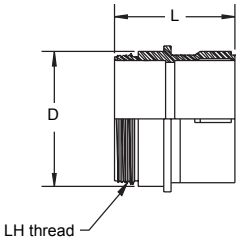

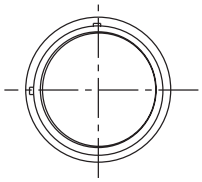

In-Line Receptacle Shell

Shell Size	Part Number	Dimensions D1	D2	L1	L2	S1	S2
06	CN-WO-1506N	1.50	1.25	2.010	1.00	1.75	2.00
08	CN-WO-1508N	2.00	1.75	2.010	1.00	2.25	2.50
10	CN-WO-1510N	2.50	2.25	2.010	1.00	2.75	3.00
C10	CN-CO-1510N	2.50	2.25	2.510	1.50	2.75	3.00
12	CN-WO-1512N	3.00	2.75	2.010	1.00	3.25	3.50
C12	CN-CO-1512N	3.00	2.75	2.510	1.50	3.25	3.50
14	CN-WO-1514N	3.50	3.25	2.010	1.00	3.75	4.00
C14	CN-CO-1514N	3.50	3.25	2.510	1.50	3.75	4.00

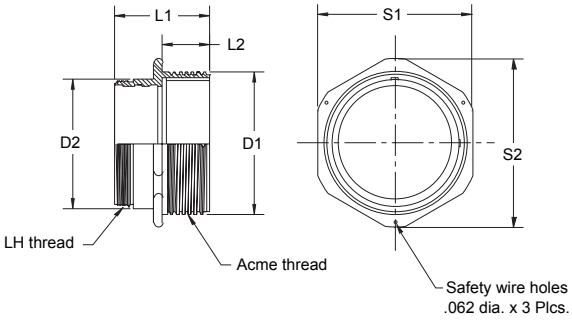

Panel Mount, Square Flange Receptacle Shell

Shell Size	Part Number	Dimensions D1	D2	D3	L1	L2	S1	S2
06	CN-WO-1706N	1.50	1.25	.175	2.010	1.00	1.75	1.38
08	CN-WO-1708N	2.00	1.75	.195	2.010	1.00	2.25	1.69
10	CN-WO-1710N	2.50	2.25	.227	2.010	1.00	2.75	2.09
C10	CN-CO-1710N	2.50	2.25	.227	2.510	1.50	2.75	2.09
12	CN-WO-1712N	3.00	2.75	.281	2.010	1.00	3.25	2.53
C12	CN-CO-1712N	3.00	2.75	.281	2.510	1.50	3.25	2.53
14	CN-WO-1714N	3.50	3.25	.344	2.010	1.00	3.75	3.03
C14	CN-CO-1714N	3.50	3.25	.344	2.510	1.50	3.75	3.03

Drill hole on panel 1/64” larger than Dimension E for front mounting, or Dimension C for back mounting.

Note - Maximum panel thickness may be increased 1/8” when using Standard Coupling Nut Plugs.

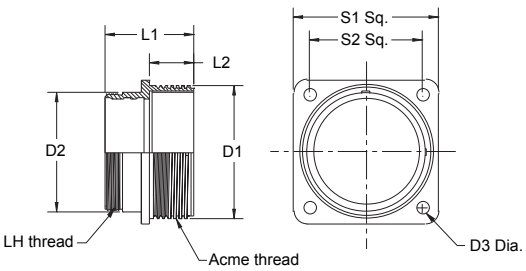

Connector Components & Accessories

Conduit Adapters - Tapped

Shell Size	Conduit Tap Size	Part Number	Dimensions D1	D2	L	S1	S2
06	¾	CN-W-2806N	2.62	1.50	1.62	1.37	0.75
08	1 ¼	CN-W-2808N	2.75	2.00	2.25	1.87	1.25
10/C10	1 ½	CN-W-2810N	2.87	2.50	2.87	2.37	1.50
12/C12	2	CN-W-2812N	3.00	3.00	3.59	2.87	2.00
14/C14	2 ½	CN-W-2814N	3.46	3.50	3.87	3.37	2.50

For use with all inserts other than those with pressure terminals.

Internal tapered pipe thread takes various types of threaded connectors.

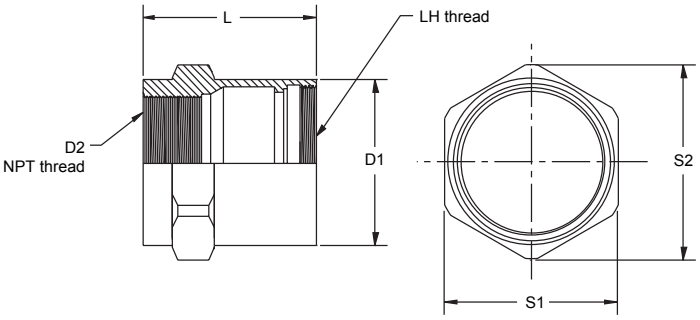

Cable Adapters

Shell Size	Standard Adapter Part Number	Long Adapter Part Number	Extra Long Adapter Part Number	L = Length Std.	Long	X-Long	Dimensions D1	D2	S1	S2
06	CN-W-2006N	CN-W-2406N	CN-W-2906N	3.00	5.25	6.50	1.38	1 ⅜-12	1.50	1.68
08	CN-W-2008N	CN-W-2408N	CN-W-2908N	3.25	5.50	6.75	1.88	1 ⅞-12	2.00	2.25
10/C10	CN-W-2010N	CN-W-2410N	CN-W-2910N	3.75	6.00	7.25	2.38	2 ⅜-12	2.50	2.88
12/C12	CN-W-2012N	CN-W-2412N	CN-W-2912N	4.25	6.50	7.75	2.88	2 ⅞-12	3.00	3.35
14/C14	CN-W-2014N	CN-W-2414N	CN-W-2914N	4.75	6.75	8.00	3.38	3 ⅜-12	3.50	3.88

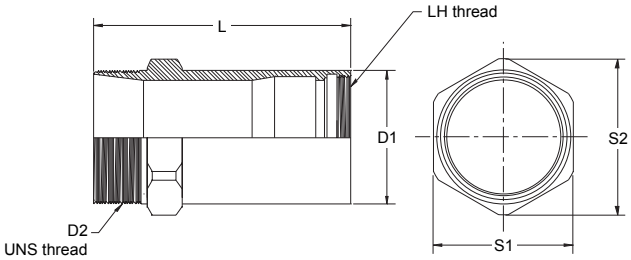

Connector Components & Accessories

Standard and Jacking Coupling Nuts

Shell Size	Standard Coupling Nut Part Number	Dimensions D	L	S1	S2
06	CN-7006-10AN	1.73	0.85	1.80	
08	CN-7008-10AN	2.23	0.85	2.25	2.50
10/C10	CN-7010-10AN	2.73	0.85	2.75	3.00
12/C12	CN-7012-10AN	3.23	0.85	3.25	3.50
14/C14	CN-7014-10AN	3.73	0.85	3.75	4.00

Shell Size	Jacking Coupling Nut Part Number	Dimensions D	L	S1	S2
06	CN-7006-30AN	1.73	1.03	1.80	
08	CN-7008-30AN	2.23	1.03	2.25	2.50
10/C10	CN-7010-30AN	2.73	1.03	2.75	3.00
12/C12	CN-7012-30AN	3.23	1.03	3.25	3.50
14/C14	CN-7014-30AN	3.73	1.03	3.75	4.00

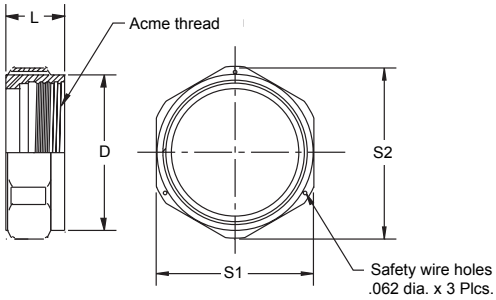

Recommended for use with inserts with 37 or more contacts.

Insert Clamp Nut

Shell Size	Part Number	Dimensions D
06	CN-W-7506-10N	1.37
08	CN-W-7508-10N	1.87
10/C10	CN-W-7510-10N	2.37
12/C12	CN-W-7512-10N	2.87
14/C14	CN-W-7514-10N	3.37

Used when open-back wiring is used behind panelboards or within large junction boxes on which the basic barrel is mounted.

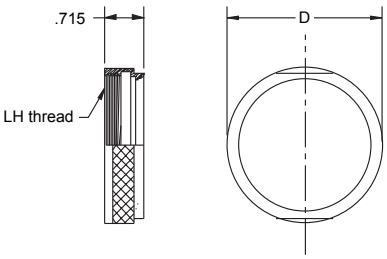

Hinged Receptacle Cover

Shell Size	Part Number	Dimensions D	L
08	CN-C-5708	2.05	1.95
10	CN-C-5710	2.60	1.95
C10	CN-C-5710-14	2.60	2.45
12	CN-C-5712	3.05	1.95
C12	CN-C-5712-14	3.05	2.45

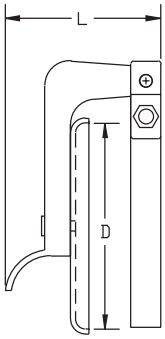

Connector Components & Accessories

Threaded Environmental Plug Covers with Chain

Shell Size	Cover with Ring & Chain Part Number	Cover with Eyelet & Chain Part Number	Dimensions					
			D	L	S1	S2	D1	D2
06	CN-W-5506-AN	CN-WF-5506-AN	1.50	1.50	1.50		1.25	11/64
08	CN-W-5508-AN	CN-WF-5508-AN	2.00	1.50	2.00	2.28	1.75	13/64
10	CN-W-5510-AN	CN-WF-5510-AN	2.50	1.50	2.50	2.78	2.25	7/32
C10	CN-C-5510-AN	CN-CF-5510-AN	2.50	2.00	2.50	2.78	2.25	7/32
12	CN-W-5512-AN	CN-WF-5512-AN	3.00	1.50	3.00	3.28	2.75	9/32
C12	CN-C-5512-AN	CN-CF-5512-AN	3.00	2.00	3.00	3.28	2.75	9/32
14	CN-W-5514-AN	CN-WF-5514-AN	3.50	1.50	3.50	3.75	3.25	11/32
C14	CN-C-5514-AN	CN-CF-5514-AN	3.50	2.00	3.50	3.75	3.25	11/32

Applications

Ring & Chain: For use with in-line plugs and receptacles

Eyelet & Chain: For use with flange mount plugs and receptacles

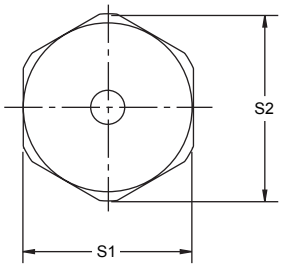

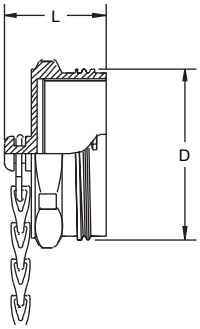

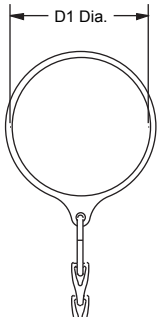

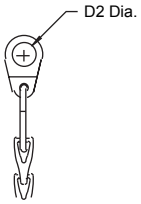

Threaded Environmental Receptacle Covers with Chain

Shell Size	Cover with Ring & Chain Part Number	Cover with Eyelet & Chain Part Number	Dimensions				
			D	S1	S2	D1	D2
06	CN-W-5606-AN	CN-WF-5606-AN	1.73	1.75		1.25	11/64
08	CN-W-5608-AN	CN-WF-5608-AN	2.23	2.25	2.50	1.75	13/64
10/C10	CN-W-5610-AN	CN-WF-5610-AN	2.73	2.75	3.00	2.25	7/32
12/C12	CN-W-5612-AN	CN-WF-5612-AN	3.23	3.25	3.50	2.75	9/32
14/C14	CN-W-5614-AN	CN-WF-5614-AN	3.73	3.75	4.00	3.25	11/32

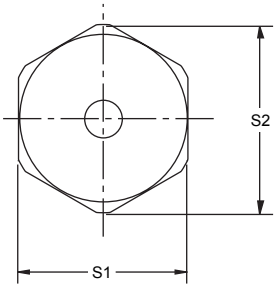

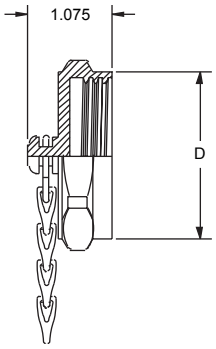

Environmental covers are furnished with a 6” length of stainless steel chain. The chain is freely attached to a shouldered swivel post to avoid twisting when covers are installed or removed. The other end has a stainless steel ring for attachment to the back of the barrel, or a stainless steel eyelet for attachment with a screw .

Cable Adapter Components & Accessories

Mechanical Clamp Nut

Shell Size	Part Number	Dimensions			
		L1	L2	S1	S2
06	CN-W-5306N	2.00	1.00	2.05	1.83
08	CN-W-5308N	2.00	1.00	2.55	2.25
10/C10	CN-W-5310N	2.03	1.00	3.05	2.80
12/C12	CN-W-5312N	2.10	1.00	3.65	3.28
14/C14	CN-W-5314N	2.25	1.13	4.45	4.25

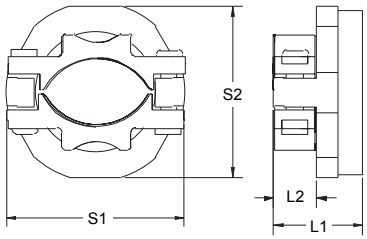

Panelboard Adapter

Shell Size	Part Number	Dimensions						
		D1	D2	D3	L1	L2	S1	S2
06	CN-W-2106N	1.38	1.13	3/16	0.75	0.56	1.63	1.38
08	CN-W-2108N	1.88	1.63	7/32	0.78	0.56	2.13	1.69
10/C10	CN-W-2110N	2.38	2.13	9/32	0.81	0.56	2.63	2.09
12/C12	CN-W-2112N	2.88	2.63	11/32	0.84	0.56	3.13	2.53
14/C14	CN-W-2114N	3.38	3.13	11/32	0.84	0.56	3.75	3.03

For basic barrels. Used when a completely external mounting is required. Gasket furnished may be used for front panel mounting only.

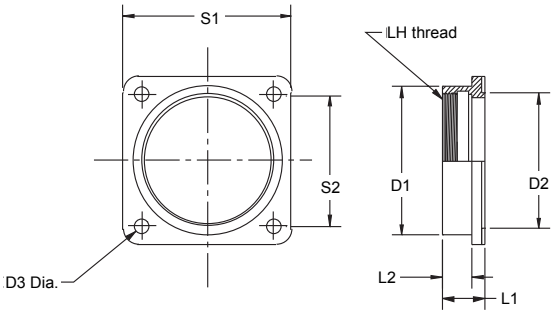

Gland Nut

Shell Size	Part Number	Dimensions		
		D	S1	S2
06	CN-7306-10AN	1.50	1.50	1.50
08	CN-7308-10AN	2.00	2.00	2.25
10/C10	CN-7310-10AN	2.50	2.50	2.88
12/C12	CN-7312-10AN	3.00	3.00	3.35
14/C14	CN-7314-10AN	3.50	3.50	3.88

Use plain or with basket weave cable grip.

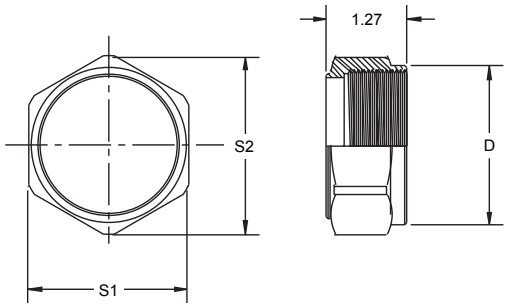

Cable Grip Components

Shell Size	Cable Dia. Dimension Min.	Cable Dia. Dimension Max	Cable Dia. Code No.*	Oil Resistant Rubber Grommets Part No.	Steel Gland Washers Part No.	Stainless Steel Basket Weave Grips Part No.	Stainless Steel Basket Weave Grips Nominal Length Inches
06	.062	.125	02	CN-6306-02C	CN-8006-4E	CN-5006-4E	3
	.125	.250	04	CN-6306-04C	CN-8006-4E	CN-5006-4E	3
	.250	.375	06	CN-6306-06C	CN-8006-8E	CN-5006-6E	4
	.375	.500	08	CN-6306-08C	CN-8006-8E	CN-5006-8E	5
	.500	.625	10	CN-6306-10C	CN-8006-12E	CN-5006-10E	6
	.625	.750	12	CN-6306-12C	CN-8006-12E	CN-5006-12E	7
	.750	.875	14	CN-6306-14C	CN-8006-15E	CN-5006-14E	7 ½
	.875	.937	15	CN-6306-15C	CN-8006-15E	CN-5006-15E	8
08	.250	.375	06	CN-6308-06C	CN-8008-8E	CN-5008-6E	4
	.375	.500	08	CN-6308-08C	CN-8008-8E	CN-5008-8E	5
	.500	.625	10	CN-6308-10C	CN-8008-12E	CN-5008-10E	6
	.625	.750	12	CN-6308-12C	CN-8008-12E	CN-5008-12E	7
	.750	.875	14	CN-6308-14C	CN-8008-16E	CN-5008-14E	7 ½
	.875	1.000	16	CN-6308-16C	CN-8008-16E	CN-5008-16E	8 ½
	1.000	1.125	18	CN-6308-18C	CN-8008-20E	CN-5008-18E	9
	1.125	1.250	20	CN-6308-20C	CN-8008-20E	CN-5008-20E	10
	1.250	1.375	22	CN-6308-22C	CN-8008-23E	CN-5008-22E	10 ½
	1.375	1.437	23	CN-6308-23C	CN-8008-23E	CN-5008-23E	10 ½
10 & C10	.500	.625	10	CN-6310-10C	CN-8010-12E	CN-5010-10E	6
	.625	.750	12	CN-6310-12C	CN-8010-12E	CN-5010-14E	7 ½
	.750	.875	14	CN-6310-14C	CN-8010-16E	CN-5010-14E	7 ½
	.875	1.000	16	CN-6310-16C	CN-8010-16E	CN-5010-18E	9
	1.000	1.125	18	CN-6310-18C	CN-8010-20E	CN-5010-18E	9
	1.125	1.250	20	CN-6310-20C	CN-8010-20E	CN-5010-20E	10
	1.250	1.375	22	CN-6310-22C	CN-8010-24E	CN-5010-24E	11
	1.375	1.500	24	CN-6310-24C	CN-8010-24E	CN-5010-24E	11
	1.500	1.625	26	CN-6310-26C	CN-8010-28E	CN-5010-28E	13
	1.625	1.750	28	CN-6310-28C	CN-8010-28E	CN-5010-28E	13
	1.750	1.875	30	CN-6310-30C	CN-8010-31E	CN-5010-31E	14 ½
	1.875	1.937	31	CN-6310-31C	CN-8010-31E	CN-5010-31E	14 ½
12 & C12	.875	1.000	16	CN-6312-16C	CN-8012-16E	CN-5012-16E	8 ½
	1.000	1.125	18	CN-6312-18C	CN-8012-20E	CN-5012-20E	10
	1.125	1.250	20	CN-6312-20C	CN-8012-20E	CN-5012-20E	10
	1.250	1.375	22	CN-6312-22C	CN-8012-24E	CN-5012-24E	11
	1.375	1.500	24	CN-6312-24C	CN-8012-24E	CN-5012-24E	11
	1.500	1.625	26	CN-6312-26C	CN-8012-28E	CN-5012-28E	13
	1.625	1.750	28	CN-6312-28C	CN-8012-28E	CN-5012-28E	13
	1.750	1.875	30	CN-6312-30C	CN-8012-32E	CN-5012-32E	15
	1.875	2.000	32	CN-6312-32C	CN-8012-32E	CN-5012-32E	15
	2.000	2.125	34	CN-6312-34C	CN-8012-36E	CN-5012-36E	16
	2.125	2.250	36	CN-6312-36C	CN-8012-36E	CN-5012-36E	16
	2.250	2.375	38	CN-6312-38C	CN-8012-39E	CN-5012-39E	17 ½
	2.375	2.437	39	CN-6312-39C	CN-8012-39E	CN-5012-39E	17 ½
14 & C14	1.375	1.500	24	CN-6314-24C	CN-8014-24E	CN-5014-24E	13
	1.500	1.625	26	CN-6314-26C	CN-8014-28E	CN-5014-28E	13
	1.625	1.750	28	CN-6314-28C	CN-8014-28E	CN-5014-28E	13
	1.750	1.875	30	CN-6314-30C	CN-8014-32E	CN-5014-32E	15
	1.875	2.000	32	CN-6314-32C	CN-8014-32E	CN-5014-32E	15
	2.000	2.125	34	CN-6314-34C	CN-8014-36E	CN-5014-36E	16
	2.125	2.250	36	CN-6314-36C	CN-8014-36E	CN-5014-36E	16
	2.250	2.375	38	CN-6314-38C	CN-8014-40E	CN-5014-40E	17 ½
	2.375	2.500	40	CN-6314-40C	CN-8014-40E	CN-5014-40E	17 ½
	2.500	2.625	42	CN-6314-42C	CN-8014-44E	CN-5014-44E	19
	2.625	2.750	44	CN-6314-44C	CN-8014-44E	CN-5014-44E	19
	2.750	2.875	46	CN-6314-46C	CN-8014-46E	CN-5014-46E	19

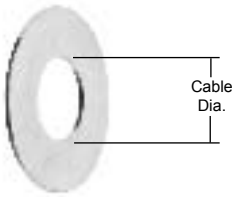

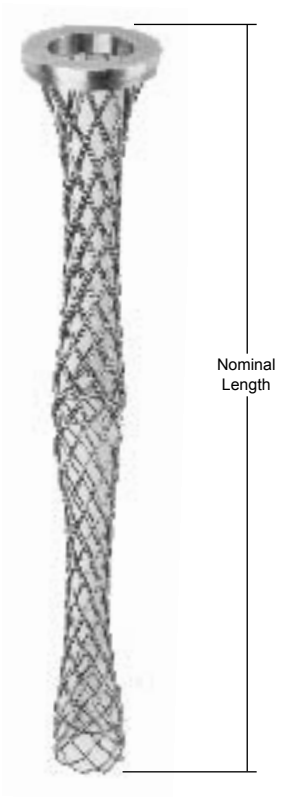

Contact Crimping and Insertion/Removal Tools

Full Cycle Crimp Tool

TC-CN-M309

This tool is a full cycle crimp tool for crimping Clements crimp contact sizes #10 AWG through #16 AWG.

(to be used with following locator dies TC-CN-XX-20L)

Locator Dies for TC-CN-M309 Crimp Tool

TC-CN-10-20L

Locator die for #10 AWG pin/socket crimp contacts

TC-CN-12-20L

Locator die for #12 AWG pin/socket crimp contacts

TC-CN-16-20L

Locator die for #16 AWG pin/socket crimp contacts

Insertion Tool for Pin/Socket Crimp Contacts

TI-10

Insertion tool for #10 AWG pin/socket crimp contact.

TI-12

Insertion tool for #12 AWG pin/socket crimp contact.

TI-16

Insertion tool for #16 AWG pin/socket crimp contact.

Removal Tool for Pin Crimp Contacts

TEP-LG

Removal tool for #8, #10 and #12 AWG pin crimp contact.

TEP-SM

Removal tool for #16 AWG pin crimp contact.

Removal Tool for Crimp Socket Contacts

TES-10

Removal tool for #10 socket crimp contact.

TES-12

Removal tool for #12 socket crimp contact.

TES-16

Removal tool for #16 socket crimp contact.

Note: To order complete insertion/removal tool kits per contact size use the following part numbers:
TCN-10 (#10 AWG), **TCN-12** (#12 AWG), **TCN-16** (#16 AWG).

Consult the factory for availability of crimping tools for #8 - 500MCM wire size contacts.

PDS Series Single Pole Power Panel Board Connectors

Part Number	Wire Size	Gender	Termination Style	Description	Ampacity
PDS-41535A	535MCM	Socket	Stud	Panel Board Socket with 7/8” Stud	900*
PDS-41535-5/8	535MCM	Socket	Stud	Panel Board Socket with 5/8” Stud	900*
PDS-40535-10L	313MCM	Pin	Solder	Pin Contact	900*
PDS-40535-11L	535MCM	Pin	Crimp	Pin Contact	900*
PDS-40535-20L	535MCM	Pin	Solder	Pin Contact	900*

* - When used with 125°C rated cable

Contact material:
High conductivity copper alloy, silver plated.

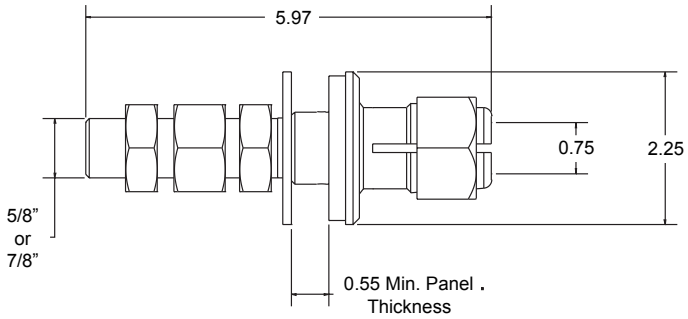

Panel Board Socket: PDS-41535X-XX

Part Number	Description
PDSB-10-X*	Pin contact Sealing Boot (cable sealing range: 1.125” - 1.50”)

*Sealing Boot Part Number	Color
PDSB-10-B	Brown
PDSB-10-BL	Blue
PDSB-10-BK	Black
PDSB-10-G	Green
PDSB-10-O	Orange
PDSB-10-R	Red
PDSB-10-W	White
PDSB-10-Y	Yellow

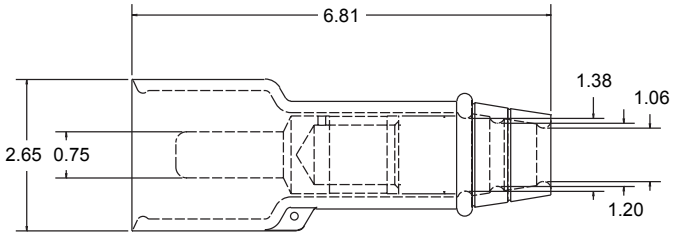

Pin & Sealing Boot: PDSB-10-XX

Consult factory for additional product information

In-line male & female cable connectors

Panel mount male & female connectors

MOG Series Single Power Connectors

Big and bulky connectors don't always guarantee performance. The MOG Power Series connectors, provides a revolutionary and superior design with a long list of features and benefits for oil, marine and gas applications. The single pole, high amperage connectors accommodate cable sizes ranging from 2/0 AWG to 535 MCM cables including the latest generation of Type P drilling cables, per IEEE 45. This connector series provides a proven secured locking coupling system and a field repairable contact system that rivals other similar power connectors. In addition, the smaller connector footprint allows greater use of the equipment panel while providing an organized connector area. The MOG Power Series provides the highest level of quality, efficiency, reliability and safety for oil field power distribution use. Consult the factory or contact one of our sales representatives or distributors to demonstrate this innovative design.

Features and Benefits

- Designed for use with Type P drilling cables @ 125°C per IEEE 45
- Cable accommodates size range from 2/0 AWG to 535 MCM
- High Conductivity/High Performance Copper Alloy silver plated crimp contacts
- Contacts are easily removable with plastic extraction tool
- 500 mating cycles minimum
- IP 68 environmental protection when mated
- CE recognized, UL and CSA applied (consult factory web site for latest product certifications)
- UL 94 VO Flame retardant material
- Patented "swivel" device removes cable torsion forces to the connector
- Protected pin front on Source side per IP2x to protect operators from shock hazard
- International phase color coding for: USA – Europe – UK – Australia
- EN/CE compliant metric cable glands
- Available secondary locking device (patented) for added safety protection
- Lighter weight and smaller footprint as compared to similar MOG power connectors
- Space saving design allows closer mounting of connectors and eliminates wasted panel usage
- High performance shock resistant shell hardware
- Triple Phase Identification provided not only with color coding but with:
  - Optional Phase markings on connector Line and Source side (Phase 1, 2 , 3, Ground and Neutral)
  - Phase shell hardware that is mechanically keyed to prevent connection errors
- MOG Power connector series allows daisy chain interconnecting capabilities
- Shell hardware provides a heavy duty connector hand grip
- Simplified termination and assembly/repair of connectors with "unique" crimp removable contact design
- Proven quick and secured coupling interconnect system

Part Number Code Logic

P75X-LD1BN-535NS

X - Non-Locking
L - Locking

Style
L - Line
P - Panel Mount

Contact
D - Drain SRT
S - Source PIN

Mechanical Key
1-9

Color Marking
1 BN - Brown, PHASE 1
2 BK - Black, PHASE 2
3 GY - Gray, PHASE 3
4 BL - Blue, Neutral
5 GN - Green, Ground
6 BK - Black PHASE 1
7 RD - Red, PHASE 2
8 BL - Black, PHASE 3
9 WH - White, Neutral

S - Swivel
Blank - None

Termination Barrel Type
N - Crimp
Blank - Solder
R - Pressure
T - Thd.
B - Lug/Bus

Wire Size
2/0
4/0
313
446
535

Consult factory for additional product information

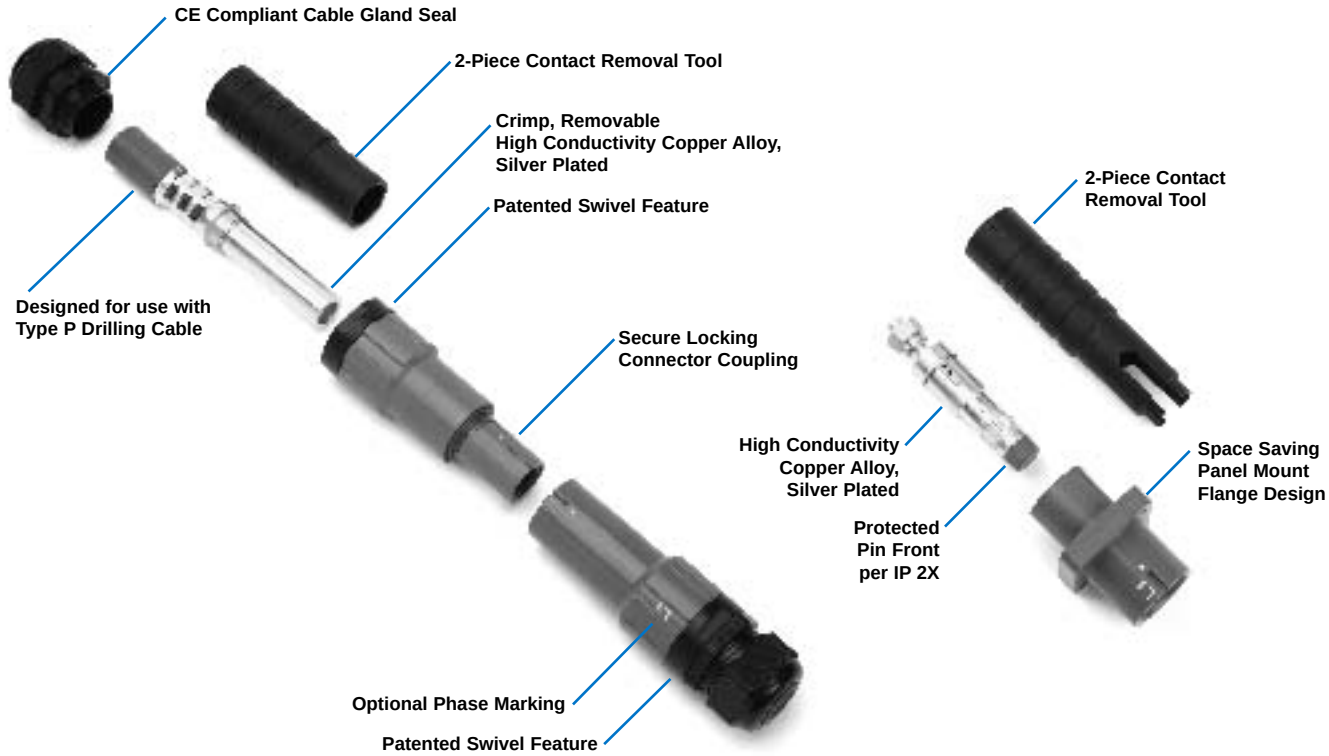

International Phase Color Coding

Continent or Country	Phase 1	Phase 2	Phase 3	Ground	Neutral
Europe	Brown	Black	Gray	Green	Blue
UK	Red	Yellow	Blue	Green	Black
USA	Black	Red	Blue	Green	White
Australia	Red	White	Blue	Green	Black

Electrical/General Performance Characteristics

Insulation:	1000V
Flammability:	UL94 VO
Environmental Sealing:	IP 68
Rated voltage to Ground:	1,000 VAC
Contact Resistance:	<5m Ohms
Temperature Range:	-30°C/140°C
Maximum Current:	900A
Contact Material:	High Conductive Copper Alloy

Crimping Information

Cable Size	Crimping Die *	Number of Crimps	Outside Dia. (mm)	Inside Dia. (mm)
4/0 AWG	ME-30 C	1	20.0	15.9
313 MCM	ME-37 C	1	24.2	19.6
444 MCM	ME-48 C	2	30.0	22.2
535 MCM	ME-60 C	3	30.0	23.9

* - For use with ASTM Class I wire.

Consult factory for additional product information