Glenair®

QUALIFIED BAYONET-LOCK CONNECTORS

VG95234

CRIMP-CONTACT MIL-DTL-5015 TYPE ELECTRICAL CONNECTORS FOR RUGGEDIZED POWER AND SIGNAL APPLICATIONS

APRIL 2020

High Voltage Electrical Power Distribution

From 0 to 60 in 3.9 Seconds

High voltage electrical power distribution is a critical component of the 100% electric Tesla Roadster.

The reliable distribution of electrical energy from the car's lithium-ion energy storage system to the vehicle's motor, electronic control module, HVAC system, transmission and regenerative braking unit depends on a high-performance wiring system made up of high-temperature shielded conduit and ruggedized reverse-bayonet power connectors—all made by Glenair.

Glenair is on the forefront of innovative efforts to advance the reliability and performance of electric vehicles. Glenair power connectors, cables and conduit are deployed in high-voltage power management and distribution applications for systems as demanding as military vehicles — and as fast as the Tesla Roadster.

Glenair®

Worldwide Sales: Glenair Italia S.p.A. - Bologna Headquarter, Tel: +39-51-782811 Email: sales@glenair.it
Italy Sales: Glenair Italia S.p.A. - Milan Sales Office, Tel: +39-02-91082121 Email: sales@glenair.it
North American Sales: Glenair Connecticut, Tel: 203-741-1115 Email: sales@glenair.com

www.glenair.com - www.glenair.it

VG95234 Qualified Bayonet-Lock Connectors
Interactive Catalogue Section Index
Table of Contents

Introduction to VG95234 Connectors

Product Line Overview
Cross References
Technical Data
How to Order
Insert Arrangements Tables,
Front Views and Rotations
fron page A-1 to page A-23

A

VG95234 Connectors

Connectors Assemble
from pages B-1 to page B-28

B

Accessories and Tools

Protective Covers
and Cable Clamps
Crimping Tables and Tools
from page C-1 to page C-22

C

Part Number Index

Complete Listing of Catalog
Pages - Interactive
Glenair Product Warnings
from page D-1 to page D-3

D

VG96929 QUALIFIED

GLENAIR VG96929

REVERSE BAYONET SINGLE POLE CONNECTORS

High-Current, Low-Volge Power Connectors for Ruggedized Military and Insustrial Applications

The Glenair High Density Fiber Optic Connection System is designed for applications that require reduced size and weight as well as outstanding optical and environmental performance. The System offers insertion loss values less than .5dB (typical loss for Glenair termini is .3 dB). Dense cavity spacing is acheived with an innovative Front Release terminus design and accomodation for M85045/16 cable.

Glenair, Inc.
1211 Air Way
Glendale, CA
91201-2497
818-247-6000
sales@glenair.com
www.glenair.com

VG95234 Qualified Power and Signal Connectors, for Military Vehicles.

Harsh Application Environments

Glenair's VG95234 Reverse Bayonet Power and Signal Connector is ideally suited for all inter-car, under-car, trainline and other rugged transportation applications. The connector family is also utilized in industrial and military applications such as ground vehicles and electric cars. Qualified to VG95234, the reverse bayonet coupling provides easier and faster coupling, especially when the connector is situated in an awkward or hard to reach location. The connector's high resistance to vibration and shock provides reliable mating in even the most rigorous application environments. Environmental protection to IP67 levels provides additional reliability.

Rugged Materials

Glenair's VG95234 connector series is fabricated in aluminum alloy with surface plating IAW QQP-416 Type II Class 3. Easy-to-terminate crimp contacts are made from silver plated copper alloy. The standard insert material is synthetic rubber which provides reliable performance in temperature ranges from -55° to +125°C..

Intermateability

Glenair's VG95234 Reverse Bayonet Power and Signal Connector is a reverse bayonet coupling version of the familiar threaded coupling MIL-DTL-5015. Insert arrangements mimic the 5015 family of configurations, including numerous supported contact sizes, connector types and arrangements. Glenair's VG95234 Connector is interchangeable and intermateable with the wide range of industry-standard reverse bayonet connectors designed around MIL-DTL-5015 and/or qualified to VG95234.

- **Fast, Easy Bayonet Coupling: 1/4 Turn**
- **Environmental and Non-Environmental Versions**
- **All Shell Styles: Plug, Square Flange, etc.**
- **High Shock and Vibration Resistance**
- **Contact Sizes from #16 to #0 in more than 63 Insert Arrangements**
- **Audible and Visual Coupling Indicators**
- **Crimp Contacts**
- **Intermateable with Glenair ITS Series**

© 2017 Glenair, Inc.

VG95234

Glenair's qualified VG95234 reverse bayonet-lock connector series is based on the MIL-DTL-5015 standard, and shares many of the same insert arrangements, shell dimensions, supported contacts and electrical performance ratings as MIL-DTL-5015 and Glenair's commercial equivalent product line, the Series ITS. The VG95234 3-point bayonet coupling mechanism provides easy mating and positive locking resistance to vibration, shock, and other connector decoupling forces in general duty and environmental interconnect systems such as railway cars, locomotives, industrial controls, factory robotics, military vehicles and other general electronic applications.

Component Materials	
Insulators	Synthetic rubber, oil and low temperature resistant (-55°C to +125°C) IAW MIL-R-3065
Shells	Aluminum alloy standard supplied with an olive green cadmium finish IAW QQ-P-416
Contacts	Crimp contacts in silver plated and copper alloy

EMI and Environmental Applications

VG95234 Series connectors are perfectly suited for use in rugged applications where EEC compliance directives for electromagnetic compatibility are required. A complete range of EMI shield termination accessories are available for both overall as well as individual wire shields.
Equipped with the appropriate backshells and environmental sealing, coupled connectors are submersible for 48 hours up to a depth of two meters.

Connector Accessories

Many of the VG95234 connectors come already paired with selected backshell accessories for most application requirements.
See the accessory descriptions on the opposite page for more information. A full range of additional connector accessories including dust caps and EMI gaskets are also available.
Please contact the factory for additional information.
Glenair's website, www.glenair.com also has complete information on these products, as well as other ruggedized power and signal connectors.

© 2017 Glenair, Inc. U.S. CAGE Code 06324 Printed in Italy

VG95234
Bayonet-Lock Assemblies
Available Components

VG95234 offers a simplified ordering and part number format that combines the five standard connector shell styles with the most popular backshells and connector accessories. Available connector shell styles, backshell types and accessories include:

VG95234 Connector Shell Styles

- *Front Panel Mount Square Flange Receptacle with Accessory Threads*
- *Rear Box Mount Square Flange Receptacle with No Accessory Threads*
- *Rear Box Mount Square Flange Through Bulkhead Receptacle*
- *Straight and 90° Plug Connector with Accessory Threads*
- *In-Line Receptacle*

VG95234 Integrated Backshell Types

Type D, E, F, J1 and J2: Basic backshell with cable clamp, bushing and wire sealing grommet.

Types E1and H: Backshell for the termination of flexible wire protection conduit. Includes wire sealing grommet.

Types G, T, U1 and U2: Simple Heat-Shrink Boot termination backshell. Includes wire sealing grommet.

Types M, N1, N2: EMI/RFI shield termination backshell with external lip for the attachment of for heat shrink boots. Includes wire sealing grommet.

VG95234 Accessories

- *Plug and receptacle protective covers with various lanyard styles for panel attachment*
- *Plug and receptacle covers with various lanyard styles for cable attachment*
- *Conductive and non-conductive gaskets for panel mount connectors*
- *Dummy stowage receptacles*
- *Cable clamps and Neoprene bushing*

© 2017 Glenair, Inc.

VG95234 Bayonet-Lock
General Duty Crimp Contact Connector
Cross Reference

Connector Cross Reference	
VG95234 Connectors	**Glenair Series ITS**
VG95234 A	ITB 4102 A
VG95234 B1	ITB 4103 A
VG95234 B2	ITB 4103 AFP
VG95234 C1	ITB 4102 PP
VG95234 C2	ITS 4102 PPFP
VG95234 D	ITS 4106 FV
VG95234 E	ITS 4108 F
VG95234 E1	ITS 4108 R
VG95234 K	ITSG4108R
VG95234 F	ITB 4101 FV
VG95234 G	ITS 4106 GR
VG95234 T	ITS G 4106 GR
VG95234 H	ITS 4106 R
VG95234 L	ITSG4106R
VG95234 J1	ITB 41030 FV
VG95234 J2	ITB 41030 FPFV
VG95234 M	ITS G 4106 SP
VG95234 N1	ITB 41030 SP
VG95234 N2	ITB 41030 SPFP
VG95234 U1	ITB 41030 GR
VG95234 U2	ITB 41030 GR FP
VG95234 V	ITB4101GR

The Glenair VG95234 reverse bayonet-lock connector series features a 3 point bayonet coupling mating interface with stainless steel coupling pins for advanced durability. Resilient closed entry inserts provide outstanding dielectric performance and environmental protection. Individual wire sealing grommets elevate the environmental protection rating to IP67. Conductive metal shells and plating provide a reliable ground plane for EMI applications when connectors are combined with appropriate shield termination backshells. Ground springs are also available in selected plug versions to further enhance EMC. Shells are keyed with three total alternate key positions. VG95234 series and equivalent connectors detailed in the catalogue, consist of:

- 16 styles of connectors/accessory assemblies
- 12 shell sizes
- 16 contact Sizes: #16, #12, #8, #4 and #0 in standard AWG. #10, #15, #25, #100-60, #160, and #500 in metric.
- 82 insert Arrangements with 1 to 61 contacts
- Standard contacts: Crimp
- 5 Available alternate insert rotations

The Glenair Series ITS connector family is the company's commercial equivalent to the VG qualified products presented in this catalog. Series ITS offers a much broader range of connector and backshell assemblies as well as additional plating options, fire-resistant inserts, optional solder-cup contacts and other variations. Customers are advised to select VG95234 versions of this reverse bayonet connector series when qualification to VG95234 is a requirement. For non-VG applications, customers will appreciate the broader range of options available in the Series ITS.

Accessory Cross Reference	
VG95324 Accessories	**Glenair Series ITS**
VG95234 KA	ITB 02KA
VG95234 KB	ITB 06T
VG95234 KC	ITB 06KC
VG95234 KR	ITB 02T
VG95234 B0D	ITB 05
VG95234 KK	IT 3057-A
VG95234 KT	IT 3420
VG95234 DA-1	IT 40450
VG95234 DH-1	IT 40460

© 2017 Glenair, Inc.

VG95234
Bayonet-Lock Crimp Contact Connector
Technical Data

Contact Information

Metric	AWG	Rated Current at 20°C	Max. Contact Resistance	mm²	Wire Size AWG
10	-	7.5 A	12.0 mΩ	0.75 - 1	-
15S - 15	16S - 16	22.0 A	6.0 mΩ	1 - 1.5	16
25A - 25	12	41.0 A	3.0 mΩ	2.5	12
60	-	73.0 A	1.0 mΩ	6	-
100	-			10	-
-	8			-	8
160	-	135.0 A	0.5 mΩ	16	-
-	4			-	4
500	-	245.0 A	0.2 mΩ	50	-
-	0			-	0

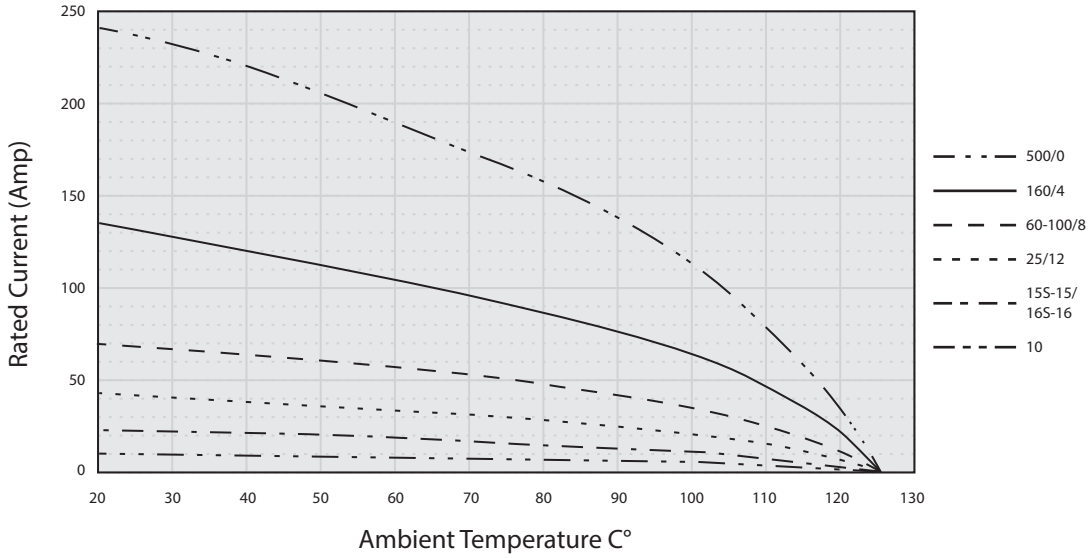

Shield Attenuation For Connector Styles M and T

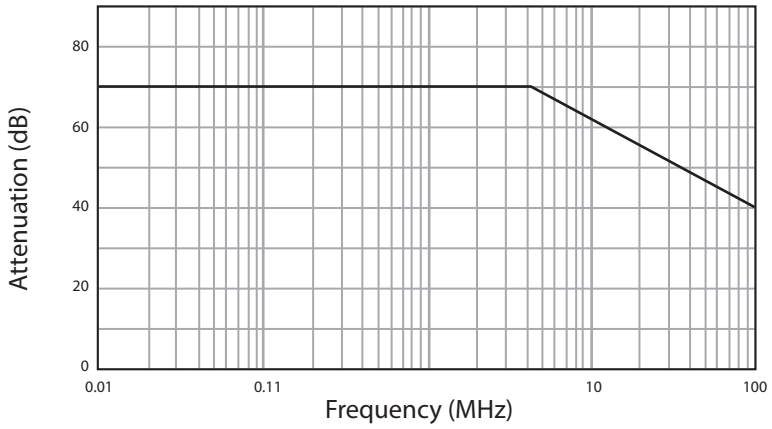

Service Rating

Class	Minimum Contact Spacing	Test Voltage Vac RMS
1	0.7 mm	1050 V
2	1.1 mm	1600 V
3	2.8 mm	2500 V
4	4.8 mm	3000 V

Insulation Resistance:
≥ 5 x 10³ MΩ

© 2017 Glenair, Inc.

Glenair®

VG95234 Bayonet-Lock
General Duty Crimp Contact (MIL-C-5015 Type)
Master How to Order

Basic Part Number

Contact Arrangement

1 **- Standard AWG Contacts**
(Omit for Metric)

Modification Codes
Omitted
for Standard Version
1 **- Connector Less Contacts**

VG95234	A	32-6	S	1	N	1

P **- Pin contacts**
S **- Socket contacts**
P/S **- For Style C1 and C2 Bulkhead Feed-Thru**

Alternate Insert Rotation
W - X - Y - Z
*(**N** = Normal)*

Connector Style
A - Front Panel Mount Square Flange Receptacle - No Accessory Threads
B1 - Rear Panel Mount Square Flange Receptacle -No Accessory Threads
B2 - Rear Panel Mount Square Flange Receptacle -Thru Holes
C1 - Bulkhead Feed-Thru Receptacle with Threaded Holes
C2 - Bulkhead Feed-Thru Receptacle with Thru Holes
D - Straight Plug with Cable Clamp and Bushing
E - 90° Plug with Cable Clamp and Bushing
E1 - 90° Plug without Clamp and Bushing
F - In-Line Receptacle with Cable Clamp and Bushing
G - Straight Plug with Shrink Boot Adapter
H - Straight Plug without Cable Clamp and Bushing
J1 - Wall Mount Receptacle with Cable Clamp, Bushing and Threaded Holes
J2 - Wall Mount Receptacle with Cable Clamp, Bushing and Thru Holes
K - 90° Plug with Grounding Fingers without Cable Clamp and Bushing
L - Straight Plug with Grounding Fingers without Cable Clamp and Bushing
M - Straight Plug with EMI/RFI Backshell,Grounding Fingers, Wire Sealing Grommet and Heat Shrink Boot Adapter
N1 - Wall Mount Receptacle with EMI Shrink boot Backshell & Threaded Holes
N2 - Wall Mount Receptacle with EMI Shrink boot Backshell & Thru Holes
T - Straight Plug with Shrink Boot Adapter and Grounding Fingers
U1 - Fixed Connector with Mounting Flange and Boot Adapter
U2 - Fixed Connector with Mounting Flange and Boot Adapter; Thru Holes
V - In-Line Receptacle with Heat Shrink Boot Adapter

© 2017 Glenair, Inc.
U.S. CAGE Code 06324
Printed in Italy

Glenair Series ITS
Commercial Equivalent Product Line

Connector/Backshell Class
A - *Non-Environmental*
GR, SP - *Environmental (Includes Wire Sealing Grommet)*
FV, F, R, RS - *Environmental (Includes Wire Sealing Grommet and Compression Ring)*

Reverse Bayonet Coupling Connector ITB for the Receptacle

Contact Gender
P - *Pin*
S - *Socket*

Accessory Description Code

Mod Code Option

ITS	G	41	00	A	20-27	P	Y	N0	-CRA	-XXX

Plug Grounding Fingers
Omit for Standard

Contact Type
41 - *Crimp*

Shell Size and Insert Arrangement

Alternate Insert Rotation
Omit for Normal

CRA - AWG Contact
CRM - Metric Contacts

00 - Front Panel Mount Square Flange Receptacle with Accessory Threads
01 - In-Line Cylindrical Receptacle with Accessory Threads
02 - Front Panel Mount Square Flange Receptacle - No Accessory Threads
03 - Rear Panel Mount Square Flange Receptacle - No Accessory Threads
030 - Rear Panel Mount Square Flange Receptacle with Accessory Threads
038 - Rear Panel Mount Square Flange Receptacle with 90° Backshell
06 - Straight Cylindrical Plug Connector with Accessory Threads
07 - Rear Panel Mount Jam Nut Receptacle - No Accessory Threads
070 - Rear Panel Mount Jam Nut Receptacle with Accessory Threads
078 - Rear Panel Mount Jam Nut Receptacle with 90° Backshell
08 - Cylindrical Plug Connector with 90° Backshell
26 - Square Flange Panel Mount Plug

© 2017 Glenair, Inc.

GLENAIR, INC. • 1211 AIR WAY • GLENDALE, CA 91201-2497 • 818-247-6000 • FAX 818-500-9912
www.glenair.com
E-Mail: sales@glenair.com

VG95234
Contact Arrangement Tables

CONTACT ARRANGEMENT TABLE

CONTACT ARRANGEMENTS	CONTACT NUMBER	SERVICE RATING	CONTACT SIZE										
			METRIC TYPE						AWG TYPE				
			500	160	100-60	25-25A	15S-15	10	0	4	8	12	16S-16
• 10SL - 3	3	2					3						
• 10SL - 4	2	2					2						
12SA - 10	4	1					4						
14S - 2	4	1					4						
14S - 5	5	1					5						
• 14S - 6	6	1					6						
• 14S - 7	3	2					3						
• 16S - 1	7	2					7						
• 16S - 4	2	3					2						
16S - 8	5	2					5						
• 16 - 7	3	2			1		2						
16 - 9	4	2				2	2						
• 16 - 10	3	2				3							
• 16 - A11	2	2				2							
• 16 - 12	1	2		1									
• 18 - 1	10	1					10						
18 - 3	2	3				2							
18 - 5	3	3										2	1
18 - 6	1	3		1						1			
• 18 - 9	7	1				2	5						
• 18 - 11	5	2				5							
• 18 - 13	4	2			1	3							
18 - 19	10	2											10
18 - 21	3	2				3							
• 20 - 2	1	3	1										
20 - 3	3	3				3							
• 20 - 8	6	1			2		4						
20-11	13	1											13
20 - 16	9	2				2	7						
20 - 18	9	2				3	6						
• 20 - 22	6	2					3				3		
20 - 23	2	2			2						2		
20 - 24	4	2									2		2
20 - 27	14	2					14						
20 - 29	17	2					17						
20 - 33	11	2					11						
• 20 - A9	9	1				9							
• 20 - A48	19	1					19						
• 22 - 2	3	3									3		
• 22 - 12	5	3			2		3						
• 22 - 14	19	2					19						

• VG Qualified
Do Not Use with Styles C1 and C2

© 2017 Glenair, Inc.
U.S. CAGE Code 06324
Printed in Italy

VG95234
Contact Arrangement Tables

CONTACT ARRANGEMENT TABLE

CONTACT ARRANGEMENTS	CONTACT NUMBER	SERVICE RATING	CONTACT SIZE										
			METRIC TYPE						AWG TYPE				
			500	160	100-60	25-25A	15S-15	10	0	4	8	12	16S-16
22 - 15	6	2				5	1						
22 - 19	14	2				14							
• 22 - 22	4	2			4								
22 - 23	8	2				8							
• 22 - 27	9	2			1		8						
22 - 28	7	2				7							
• 22 - B22	4	2			4								
22-82	10	2									2		8
24-4	4	3	1				3						
• 24 - 9	2	2								2			
• 24 - 10	7	2			7								
• 24 - 11	9	2			3	6					3	6	
• 24 - 12	5	2								2		3	
24 - 20	11	3				2	9						
24 - 22	4	3			4						4		
• 24 - 28	24	1					24						
28 - 09	9	2		4			5			4			5
• 28 - 11	22	2				4	18						
28 - 12	26	2					26						
• 28 - 20	14	2				10	4						
• 28 - 21	37	2					37						
• 28 - 22	6	3		3			3			3			3
28 - 51	12	3				3							
• 28 - A16	9	2					5			4			
28 - A51	43	2					43						
• 28 - A63	28	1				9	19						
• 32 - 1	5	3	2			3			2			3	
• 32 - 3	9	3							1	2		2	4
32 - 5	2	3	2						2				
• 32 - 6	23	2		2	3	2	16			2	3	2	16
• 32 - 7	35	1				7	28						
• 32 - 15	8	3				6			2				
32 - 17	4	3		4						4			
32 - 59	42	2			2		40						
32 - A55	55	2					55						
• 32 - A69 #	61	1					20	41					
• 36 - 3	6	3	3			3			3			3	
• 36 - 5	4	2	4						4				
• 36 - 6	6	2							2	4			
• 36 - 10	48	2					48						
• 36 - A35	8	2					4		4				

• VG Qualified
Do Not Use with Styles C1 and C2

© 2017 Glenair, Inc.
U.S. CAGE Code 06324
Printed in Italy

VG95234
Insert Rotations

Insert Rotations Tables

INSERT ROTATION TABLE					
CONTACT ARRANGEMENTS	ROTATIONS DEGREES				
	W	X	Y	Z	TOLERANCE
• 10SL - 3					
• 10SL - 4					
12SA - 10					
14S - 2		120	240		± 2°
14S - 5		110			± 2°
• 14S - 6					
• 14S - 7	90	180	270		± 2°
• 16S - 1					
• 16S - 4		110	250		± 2°
16S - 8		170	265		± 2°
• 16 - 7		110	250		± 2°
16 - 9	35	110	250	325	± 2°
• 16 - 10		180	270		± 2°
• 16 - A11		110	250		± 2°
• 16 - 12					
• 18 - 1		145	215		± 2°
18 - 3	35	110	250	325	± 2°
18 - 5	80	110	250	280	± 2°
18 - 6					
• 18 - 9	80	110	250	280	± 2°
• 18 - 11		170	265		± 2°
• 18 - 13		110	250		± 2°
18 - 19		120	240		± 2°
18 - 21					
• 20 - 2					
20 - 3	70	145	215	290	± 2°
• 20 - 8		110	250		± 2°
20-11					± 2°
20 - 16	80	110	250	280	± 2°
20 - 18	35	110	250	325	± 2°
• 20 - 22[b]	80	110*	250*	280	± 1° 30′
20 - 23	35	110	250	325	± 2°
20 - 24	35	110	250	325	± 2°
20 - 27	35	110	250	325	± 2°
20 - 29	80			280	± 2°
20 - 33				280	± 2°
• 20 - A9		110	250		± 2°
• 20 - A48		80	280		± 2°
• 22 - 2[a]		145	215		± 1° 30′
• 22 - 12		110	250		± 1° 30′
• 22 - 14					

• VG Qualified
Do Not Use with Styles C1 and C2
a Not for new design
b Custom rotations can be available upon specific request
* Rotations are for visual reference only, mating might be possible

© 2017 Glenair, Inc.

Insert Rotations Tables

INSERT ROTATION TABLE					
CONTACT ARRANGEMENTS	ROTATIONS DEGREES				
	W	X	Y	Z	TOLERANCE
22 - 15	80	110	250	280	± 2°
22 - 19	80	110	250	280	± 2°
• 22 - 22		110	250		± 1° 30′
22-23	35		250		± 2°
• 22 - 27			250		± 1° 30′
22 - 28	80			280	± 2°
• 22 - B22		110	250		± 1° 30′
22-82	80	110	250	280	± 2°
24-4	80	110	250	280	± 2°
• 24 - 9[a]	35	110	250	325	± 1° 30′
• 24 - 10					
• 24 - 11		110	250		± 1° 30′
• 24 - 12[a]		110	250		± 1° 30′
24 - 20	80	110	250	280	± 2°
24 - 22	45	110	250		± 2°
• 24 - 28		110	250		± 1° 30′
28 - 09	110	250	260	280	± 2°
• 28 - 11	80	110	250	280	± 1° 30′
28 - 12	90	180	270		± 2°
• 28 - 20		110	250		± 1° 30′
• 28 - 21		110	250		± 1° 30′
• 28 - 22	70	145	215	290	± 1° 30′
28-51	80	135	190		± 2°
• 28 - A16		110	250		± 1° 30′
28-A51					
• 28 - A63		100	260		± 1° 30′
• 32 - 1		110	250		± 1° 30′
• 32 - 3[a]		110	250		± 1° 30′
32 - 5	35	110	250	325	± 2°
• 32 - 6		110	250		± 1° 30′
• 32 - 7		125	235		± 1° 30′
• 32 -15	35	110	250	280	± 1° 30′
32 - 17	45	110	250		± 2°
32-59	36	108	252	324	± 2°
32 - A55	80	110	250	280	± 2°
• 32 - A69 #		110	250		± 1°
• 36 - 3	70	145	215	290	± 1° 30′
• 36 - 5		120	240		± 1° 30′
• 36 - 6[a]		110	250		± 1° 30′
• 36 - 10		125	235		± 1° 30′
• 36 - A35					

• VG Qualified
Do Not Use with Styles C1 and C2
a Not for new design

© 2017 Glenair, Inc. U.S. CAGE Code 06324 Printed in Italy

VG95234
Contact Arrangements Front View of Pin Insert

1 CONTACT

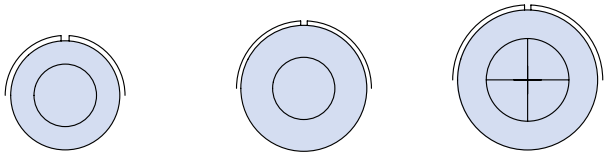

Arrangement	16-12	18-6	20-2
Contact Size	160	160, 4	500
Service Rating	2	3	3

2 CONTACTS

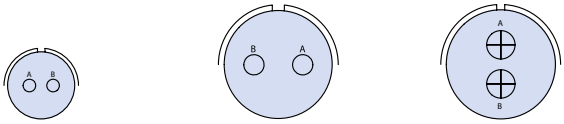

Arrangement	10SL-4	16S-4	16-A11
Contact Size	15S	15S	pin 25A / socket 25
Service Rating	2	3	2

2 CONTACTS

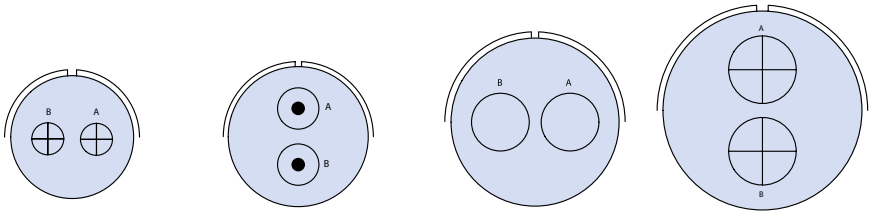

Arrangement	18-3	20-23	24-9	32-5
Contact Size	25	60, 8	4	500, 0
Service Rating	3	2	2	3

3 CONTACTS

Arrangement	10SL-3	14S-7	16-7	16-10
Contact Size	15S	15	1/100; 2/15	25
Service Rating	2	2	2	2

3 CONTACTS

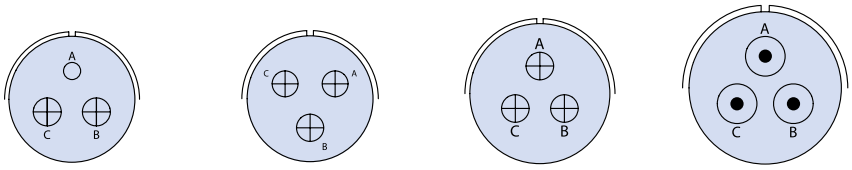

Arrangement	18-5	18-21	20-3	22-2
Contact Size	2/12, 1/16	25	25	8
Service Rating	3	2	3	3

CONTACT SIZE

METRIC TYPE						AWG TYPE				
500	160	100-60	25-25A	15S-15	10	0	4	8	12	16S-16

© 2017 Glenair, Inc.
U.S. CAGE Code 06324
Printed in Italy

VG95234
Contact Arrangements Front View of Pin Insert

4 CONTACTS

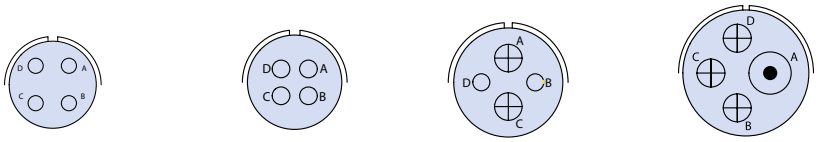

Arrangement	12SA-10	14S-2	16-9	18-13
Contact Size	15S	15S	2/25, 2/15	1/60; 3/25
Service Rating	1	1	2	2

4 CONTACTS

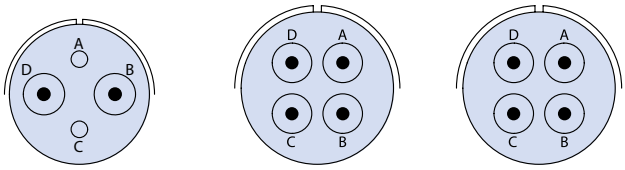

Arrangement	20-24	22-22	22-B22
Contact Size	2/8; 2/16	100	60
Service Rating	2	2	2

4 CONTACTS

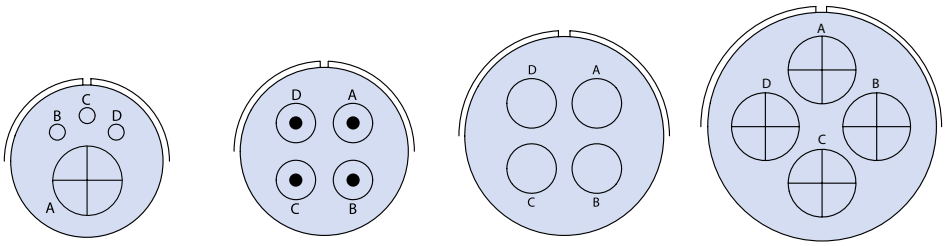

Arrangement	24-4	24-22	32-17	36-5
Contact Size	1/500, 3/15	60, 8	160, 4	500,0
Service Rating	3	3	3	2

5 CONTACTS

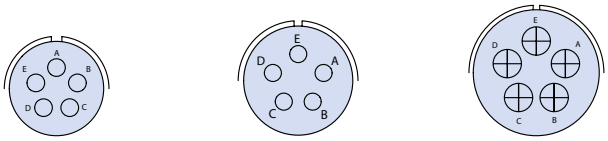

Arrangement	14S-5	16S-8	18-11
Contact Size	15S	15S	25
Service Rating	1	2	2

CONTACT SIZE

METRIC TYPE						AWG TYPE				
500	160	100-60	25-25A	15S-15	10	0	4	8	12	16S-16

© 2017 Glenair, Inc.

VG95234
Contact Arrangements Front View of Pin Insert

5 CONTACTS

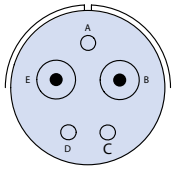
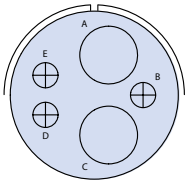
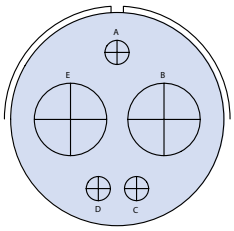

Arrangement	22-12	24-12	32-1
Contact Size	3/15, 2/100	3/12, 2/4	3/25, 2/500, 3/12, 2/0
Service Rating	3	2	A=4; Balance=3

6 CONTACTS

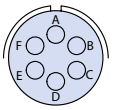
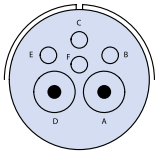
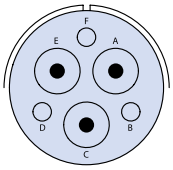
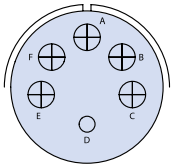

Arrangement	14S-6	20-8	20-22	22-15*
Contact Size	15S	2/100, 4/15	3/8, 3/15	5/25,1/15
Service Rating	1	1	2	D=4; Balance=2

6 CONTACTS

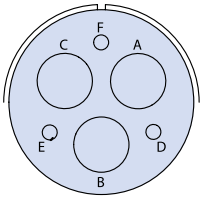
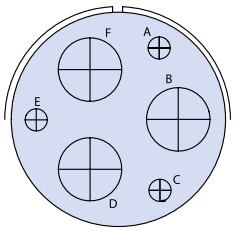
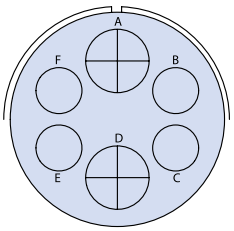

Arrangement	28-22	36-3	36-6
Contact Size	3/160, 3/15; 3/4, 3/16	3/500, 3/25; 3/0, 3/12	4/4, 2/0
Service Rating	3	3	2

7 CONTACTS

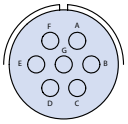
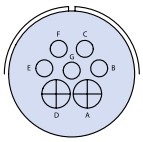
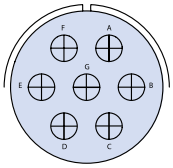
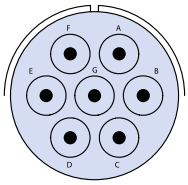

Arrangement	16S-1	18-9	22-28	24-10
Contact Size	15S	2/25, 5/15	25	100
Service Rating	2	1	2	2

CONTACT SIZE

METRIC TYPE						AWG TYPE				
500	160	100-60	25-25A	15S-15	10	0	4	8	12	16S-16

© 2017 Glenair, Inc.
U.S. CAGE Code 06324
Printed in Italy

VG95234
Contact Arrangements Front View of Pin Insert

8 CONTACTS

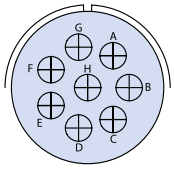
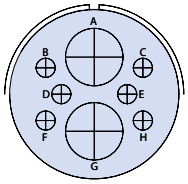
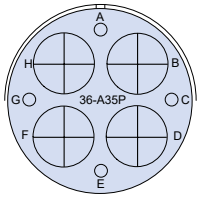

Arrangement	22-23	32-15	36-A35
Contact Size	25	6/25, 2/0	4/15, 4/0
Service Rating	H=4; Balance=2	3	2

9 CONTACTS

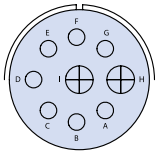
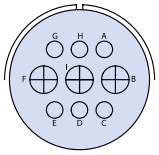
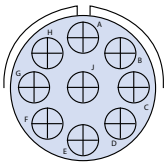
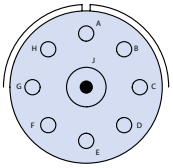

Arrangement	20-16	20-18	20-A9	22-27
Contact Size	2/25, 7/15	3/25, 6/15	25	8/15, 1/60
Service Rating	2	2	J=3; Balance=1	J=3; Balance=2

9 CONTACTS

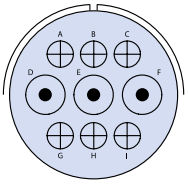
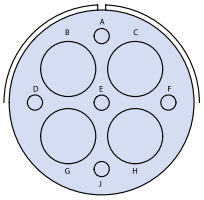
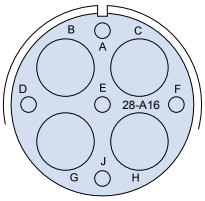

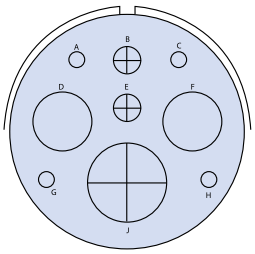

Arrangement	24-11	28-09	28-A16	32-3
Contact Size	6/25, 3/100, 6/12, 3/8	4/160, 5/15, 4/4, 5/16	4/4, 5/15	4/16, 2/12, 2/4, 1/0
Service Rating	2	2	2	3

10 CONTACTS

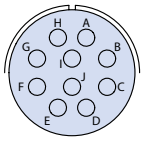
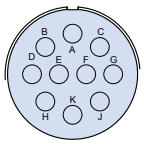
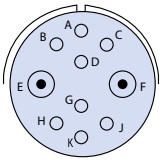

Arrangement	18-1	18-19	22-82
Contact Size	15	10/16	8/16; 2/8
Service Rating	A, D, E, H, I, J=1; B, C,F,G=2	2	2

CONTACT SIZE

METRIC TYPE						AWG TYPE				
500	160	100-60	25-25A	15S-15	10	0	4	8	12	16S-16

© 2017 Glenair, Inc.

VG95234
Contact Arrangements Front View of Pin Insert

11 CONTACTS

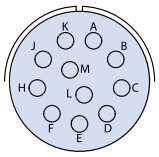

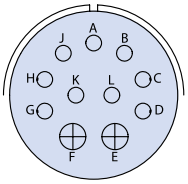

Arrangement	20-33	24-20
Contact Size	15	2/25, 9/15
Service Rating	2	3

12 CONTACTS

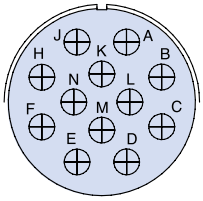

13 CONTACTS

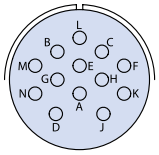

Arrangement	28-51	20-11
Contact Size	25	16
Service Rating	3	1

14 CONTACTS

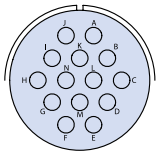

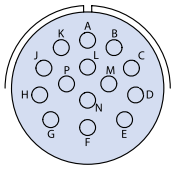

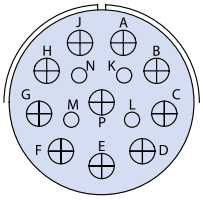

Arrangement	20-27	22-19	28-20
Contact Size	15	15	4/15, 10/25
Service Rating	2	2	2

17 CONTACTS

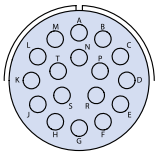

Arrangement	20-29
Contact Size	15
Service Rating	2

CONTACT SIZE

METRIC TYPE						AWG TYPE				
500	160	100-60	25-25A	15S-15	10	0	4	8	12	16S-16

© 2017 Glenair, Inc.
U.S. CAGE Code 06324
Printed in Italy

VG95234
Contact Arrangements Front View of Pin Insert

19 CONTACTS

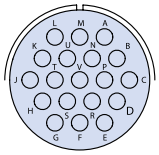

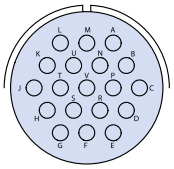

Arrangement	20-A48	22-14
Contact Size	15	15
Service Rating	1	2

22 CONTACTS

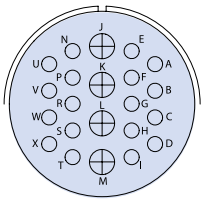

Arrangement	28-11
Contact Size	18/15, 4/25
Service Rating	2

23 CONTACTS

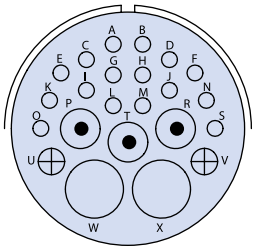

Arrangement	32-6
Contact Size	16/15, 2/25, 3/60, 2/160, 16/16, 2/12, 3/8, 2/4
Service Rating	2

24 CONTACTS

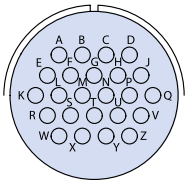

Arrangement	24-28
Contact Size	24/15
Service Rating	1

CONTACT SIZE

METRIC TYPE						AWG TYPE				
500	160	100-60	25-25A	15S-15	10	0	4	8	12	16S-16

© 2017 Glenair, Inc.

VG95234
Contact Arrangements Front View of Pin Insert

26 CONTACTS

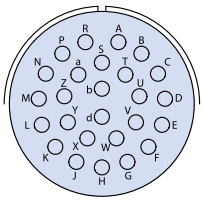

Arrangement	28-12
Contact Size	15
Service Rating	2

28 CONTACTS

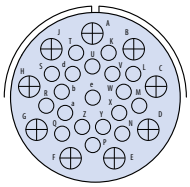

Arrangement	28-A63
Contact Size	19/15, 9/25
Service Rating	E=2; Balance=1

35 CONTACTS

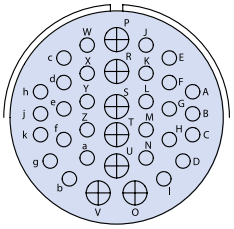

Arrangement	32-7
Contact Size	28/15, 7/25
Service Rating	A, B,H, J=1; Balance=2

37 CONTACTS

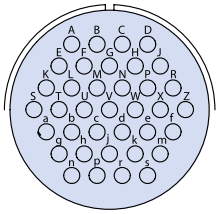

42 CONTACTS

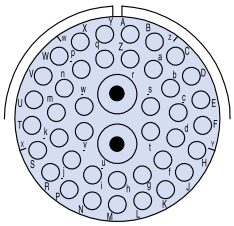

Arrangement	28-21	32-59
Contact Size	15	2/100, 40/15
Service Rating	2	2

CONTACT SIZE

METRIC TYPE						AWG TYPE				
500	160	100-60	25-25A	15S-15	10	0	4	8	12	16S-16

© 2017 Glenair, Inc.

VG95234
Contact Arrangements Front View of Pin Insert

43 CONTACTS

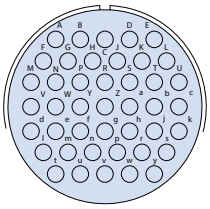

48CONTACTS

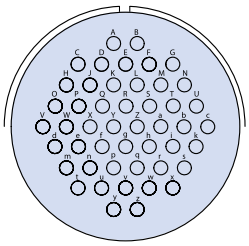

Arrangement	28-A51	36-10
Contact Size	15	15
Service Rating	2	2

55 CONTACTS

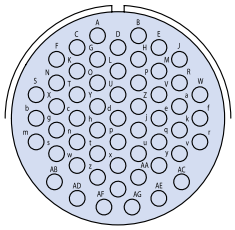

Arrangement	32-A55
Contact Size	15
Service Rating	2

61 CONTACTS

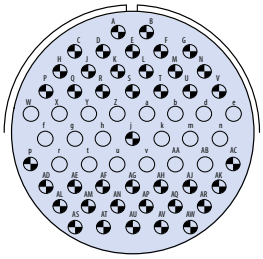

Arrangement	32A-69*
Contact Size	41/10, 20/15
Service Rating	1

*Not for connectors style C1 and C2

CONTACT SIZE

METRIC TYPE						AWG TYPE				
500	160	100-60	25-25A	15S-15	10	0	4	8	12	16S-16

© 2017 Glenair, Inc.

VG95234
Pin Contacts

PIN CONTACT

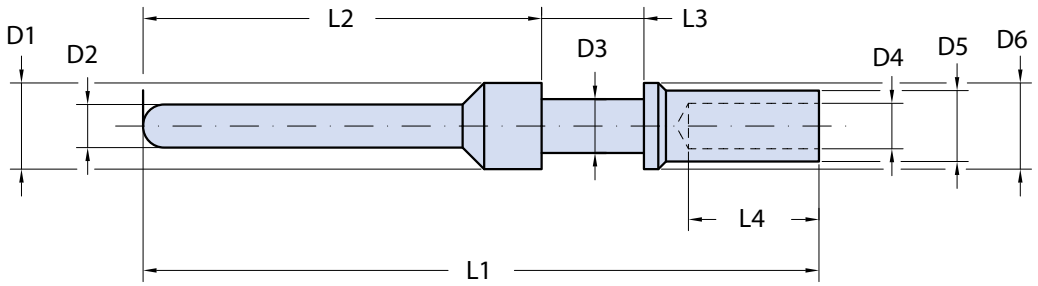

PIN CONTACTS

VG Part Number	Part Number	Color Code	Contact Size Metric	Contact Size AWG	D1 +0 -0.2	D2 +0 -0.5	D3 +0 -0.15	D4 +0.15 -0	D5 +0 -0.1	D6 +0 -0.2	L1 ±0.2	L2 ±0.15	L3 ±0.1	L4 Min.
VG95234P10	10-234-10PG10		10		2.00	1.04	1.50	1.50	2.40	2.60	28.4	11.3	4.75	4.6
VG95234P10-001	10-234-10P-001G10	Blue						0.90						
VG95234P15S	10-234-15SPG10		15S	16S	3.20	1.60	1.75	1.75	2.75	3.20	27.4	13.9	3.85	6.8
VG95234P15S-001	10-234-15SP-001G10	Blue						0.90						
VG95234P15S-002	10-234-15SP-002G10	Red						1.20						
VG95234P15	10-234-15PG10		15	16	3.20	1.60	1.75	1.75	2.75	3.20	31.4	13.9	7.90	6.8
VG95234P15-001	10-234-15P-001G10	Blue						0.90						
VG95234P15-002	10-234-15P-002G10	Red						1.20						
VG95234P25	10-234-25PG10		25	12	4.80	2.40	3.30	2.50	3.80	4.80	37.0	18.3	7.90	6.8
VG95234P25-001	10-234-25P-001G10	Black						1.75	3.40					
VG95234P25A	10-234-25APG10		25		4.80	2.40	3.30	2.50	3.80	4.80	33.9	15.2	7.90	6.8
VG95234P60	10-234-60PG10	Yellow	60		7.60	3.60	6.25	3.50	6.80	7.60	39.6	20.0	6.35	12.0
VG95234P60-001	10-234-60P-001G10	Green						2.50						
VG95234P100	10-234-100PG10		100		7.60	3.60	6.25	4.80	6.80	7.60	39.6	20.0	6.35	12.0
VG95234P8	10-234-8PG10			8	7.60	3.60	6.25	4.55	6.80	7.60	39.6	20.0	6.35	12.0
VG95234P160	10-234-160PG10		160		11.20	5.75	9.55	6.20	9.55	11.20	39.6	20.0	6.35	12.0
VG95234P160-001	10-234-160P-001G10	Brown						5.70						
VG95234P4	10-234-4PG10			4	11.20	5.75	9.55	7.10	9.55	11.20	39.6	20.0	6.35	12.0
VG95234P500	10-234-500PG10		500		15.15	9.10	13.55	10.70	14.35	15.15	41.0	20.0	6.35	14.0
VG95234P500-001	10-234-500P-001G10	White						7.60						
VG95234P500-002	10-234-500P-002G10	Grey						9.10						
VG95234P0	10-234-0PG10			0	15.15	9.10	13.55	11.50	14.35	15.15	41.0	20.0	6.35	14.0

Dimensions in millimeters are subject to change without notice.

© 2017 Glenair, Inc.

GLENAIR, INC. • 1211 AIR WAY • GLENDALE, CA 91201-2497 • 818-247-6000 • FAX 818-500-9912
www.glenair.com
E-Mail: sales@glenair.com

SOCKET CONTACT

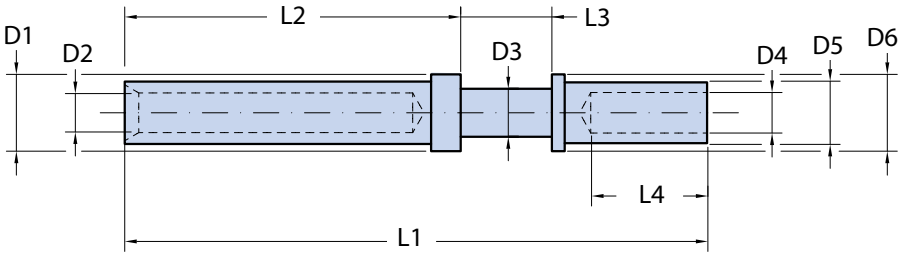

SOCKET CONTACTS

VG Part Number	Part Number	Color Code	Contact Size Metric	Contact Size AWG	D1 +0 -0.2	D2 +0 -0.5	D3 +0 -0.15	D4 +0.15 -0	D5 +0 -0.1	D6 +0 -0.2	L1 ±0.2	L2 ±0.15	L3 ±0.1	L4 Min.
VG95234S10	10-234-10SG10		10		2.00	1.04	1.50	1.50	2.40	2.60	36.8	19.7	4.75	4.6
VG95234S10-001	10-234-10S-001G10	Blue						0.90						
VG95234S15S	10-234-15SSG10		15S	16S	3.20	1.60	1.75	1.75	2.75	3.20	29.1	15.1	3.90	6.8
VG95234S15S-001	10-234-15SS-001G10	Blue						0.90						
VG95234S15S-002	10-234-15SS-002G10	Red						1.20						
VG95234S15	10-234-15SG10		15	16	3.20	1.60	1.75	1.75	2.75	3.20	37.8	19.8	7.90	6.8
VG95234S15-001	10-234-15S-001G10	Blue						0.90						
VG95234S15-002	10-234-15S-002G10	Red						1.20						
VG95234S25	10-234-25SG10		25	12	4.80	2.40	3.30	2.50	3.80	4.80	37.0	19.0	7.90	6.8
VG95234S25-001	10-234-25S-001G10	Black						1.75	3.40					
VG95234S60	10-234-60SG10	Yellow	60		7.60	3.60	6.25	3.50	6.80	7.60	40.1	20.6	6.35	12.0
VG95234S60-001	10-234-60S-001G10	Green						2.50						
VG95234S100	10-234-100SG10		100		7.60	3.60	6.25	4.80	6.80	7.60	40.1	20.6	6.35	12.0
VG95234S8	10-234-8SG10			8	7.60	3.60	6.25	4.55	6.80	7.60	40.1	20.6	6.35	12.0
VG95234S160	10-234-160SG10		160		11.20	5.75	9.55	6.20	9.55	11.20	40.1	20.6	6.35	12.0
VG95234S160-001	10-234-160S-001G10	Brown						5.70						
VG95234S4	10-234-4SG10			4	11.20	5.75	9.55	7.10	9.55	11.20	40.1	20.6	6.35	12.0
VG95234S500	10-234-500SG10		500		15.15	9.10	13.55	10.70	14.35	15.15	41.6	20.6	6.35	14.0
VG95234S500-001	10-234-500S-001G10	White						7.60						
VG95234S500-002	10-234-500S-002G10	Grey						9.10						
VG95234S0	10-234-0SG10			0	15.15	9.10	13.55	11.50	14.35	15.15	41.6	20.6	6.35	14.0

Dimensions in millimeters are subject to change without notice.

© 2017 Glenair, Inc. U.S. CAGE Code 06324 Printed in Italy

VG95234
Sealing Plugs and Alternate Key Position

SEALING PLUGS

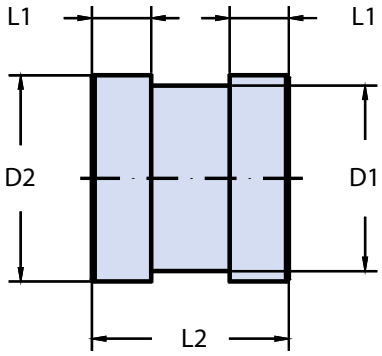

SEALING PLUG DIMENSIONS

Part Number	Contact Size		D1 ±0.1	D2 ±0.2	L1 ±0.1	L2 ±0.3	Color
	Metric	AWG					
VG95234 B20	10		2.3	3.0	2.4	9.7	Red
VG95234 B16	15S - 15		2.8	3.7	3.2	11.9	Blue
VG95234 B12	25A - 25		3.7	4.6	3.2	11.9	Yellow
VG95234 B8	60 - 100	8	5.0	5.8	3.2	11.9	White
VG95234 B4	160	4	7.6	8.5	3.2	11.9	Green
VG95234 B0	500	0	12.8	13.5	3.2	11.9	Black

ALTERNATE KEY POSITION

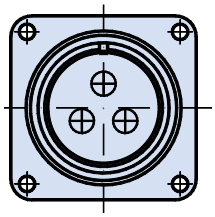

Normal Position

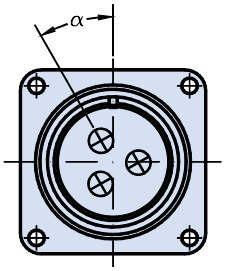

Alternate Position
with Socket Contacts

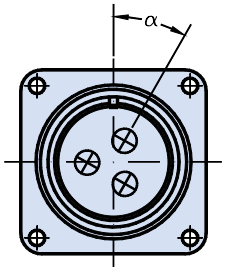

Alternate Position
with Pin Contacts

Dimensions in millimeters are subject to change without notice.

© 2017 Glenair, Inc.
U.S. CAGE Code 06324
Printed in Italy

VG95234
Bayonet Lock Assemblies
Maximum Panel Thickness and Panel Cut-Out Mounting Data

MAXIMUM PANEL THICKNESS

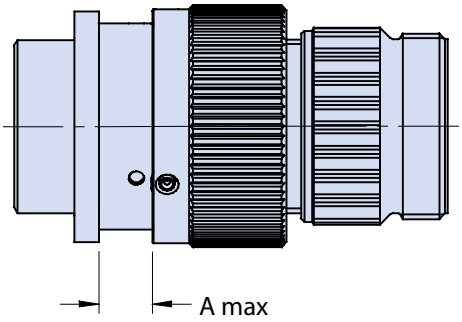

PANEL THICKNESS FOR TYPE A, J1, J2, N1 AND N2 CONNECTORS (Used for Rear Mounting)

Shell Size	10SL	14S	16S 16	18	20	22	24	28	32	36
A	3,70	3,70	3,70	3,70	3,70	3,70	5,25	5,25	6,10	6,10

PANEL THICKNESS FOR TYPE B, B2, C1, C2, S1, S2, U1 AND N2 CONNECTORS (Used for Rear Mounting)

Shell Size	10SL	14S	16S 16	18	20	22	24	28	32	36
A	7,20	7,20	7,20	7,50	7,50	7,50	7,50	7,50	7,50	7,50

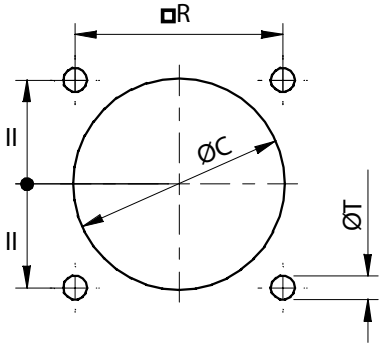

Dimensions in millimeters are subject to change without notice.

PANEL CUT-OUT FOR TYPE A, J1, J2, N1 AND N2 CONNECTORS (Front Panel Mounting)

Shell Size	10SL	14S	16S 16	18	20	22	24	28	32	36
ØC	17,0	20,0	23,0	26,5	30,0	33,0	36,0	42,0	48,5	55,0
R ±0.1	18,2	23,0	24,6	27,0	29,4	31,8	34,9	39,7	44,5	49,2
ØT	3,4	3,4	3,4	3,4	3,4	3,4	3,9	3,9	4,5	4,5

PANEL CUT-OUT FOR TYPE B, B2, C1, C2, S1, S2, U1 CONNECTORS (Rear Panel Mounting)

Shell Size	10SL	14S	16S 16	18	20	22	24	28	32	36
ØC	19,1	25,5	28,3	31,7	35,0	38,3	41,8	47,6	54,3	60,5
R ±0.1	18,2	23,0	24,6	27,0	29,4	31,8	34,9	39,7	44,5	49,2
ØT	4,5	4,5	4,5	4,5	4,5	4,5	4,5	5,5	5,5	5,5

© 2017 Glenair, Inc.

VG95234 A
Front Panel Wall Mount Receptacle

Basic Part Number		Contact Arrangement	1 - Standard AWG Contacts (Omit for Metric)		Modification Codes Omitted for Standard Version 1 - Connector Less Contacts	
VG95234	A	32-6	S	1	N	1
	A - Front Panel Mount Receptacle		P - Pin contacts S - Socket contacts		Alternate Insert Rotation W - X - Y - Z (N = Normal)	

Application Notes

1. Front panel mount square flange receptacle - No accessory threads. Through mounting holes.
2. Standard crimp contact material consists of copper alloy with silver plating. Please see pages A-20 - A-21 for additional contact information.
3. Insert arrangements IAW VG95234. Please see pages A-12 - A-19.
4. Standard insert is synthetic rubber, oil and low temperature resistant (-55°C to +125°C) IAW MIL-R-3065.
5. All dimensions are metric unless otherwise noted.

Dimensions in millimeters are subject to change without notice.

© 2017 Glenair, Inc. U.S. CAGE Code 06324 Printed in Italy

VG95234 A
Front Panel Wall Mount Receptacle

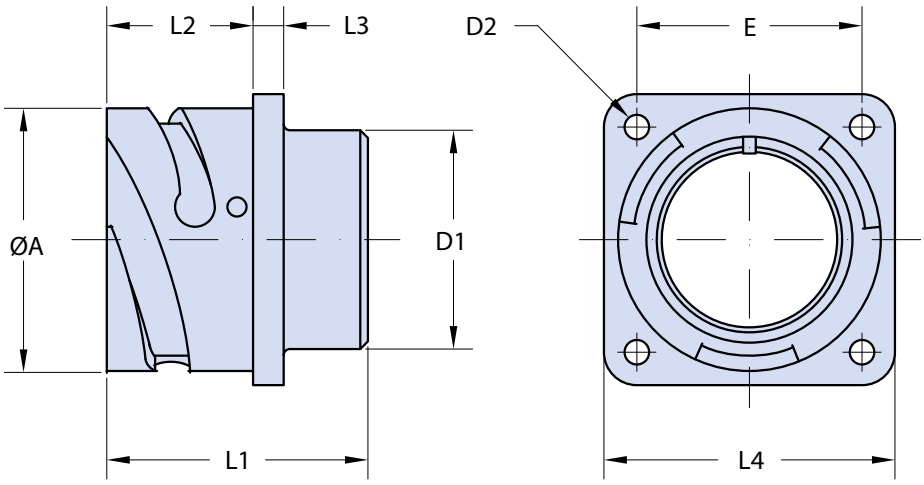

TABLE I: DIMENSIONS

Shell Size	ØA +0 -0.15	D1 Max	D2 H13	E ±0.1	L1 ±0.3	L2 +0.4 -0	L3 ±0.2	L4 ±0.3	Weight gr. Max
10 SL	18.2	16.2	3.2	18.2	24.7	14.2	2.8	25.4	12
14 S	24.6	19.2	3.2	23.0	24.7	14.2	3.2	30.0	17
16 S	27.4	22.4	3.2	24.6	24.7	14.2	3.2	32.5	19
16	27.4	22.4	3.2	24.6	33.8	19.0	3.2	32.5	22
18	30.8	25.6	3.2	27.0	33.8	19.0	4.0	35.0	28
20	34.2	29.0	3.2	29.4	33.8	19.0	4.0	38.0	33
22	37.4	32.2	3.2	31.8	33.8	19.0	4.0	41.0	38
24	40.9	35.3	3.7	34.9	33.8	20.6	4.0	44.5	46
28	46.7	41.4	3.7	39.7	33.8	20.6	4.0	50.8	52
32	53.4	47.8	4.3	44.5	33.8	22.2	4.0	57.0	64
36	59.6	54.1	4.3	49.2	33.8	22.2	4.0	63.5	80

Dimensions in millimeters are subject to change without notice.

© 2017 Glenair, Inc. U.S. CAGE Code 06324 Printed in Italy

VG95234 B1 and VG95234 B2
Rear Panel Wall Mount Receptacle with Threaded (B1) and Thru-Holes (B2)

Basic Part Number		Contact Arrangement	1 - Standard AWG Contacts (Omit for Metric)		Modification Codes Omitted for Standard Version; 1 - Connector Less Contacts	
VG95234	B1	32-6	S	1	N	1
	Rear Panel Mount Receptacle with... B1 - Threaded Holes; B2 - Thru Holes		P - Pin contacts; S - Socket contacts		Alternate Insert Rotation W - X - Y - Z (N = Normal)	

Application Notes

1. Rear panel mount square flange receptacle - No accessory threads.
2. Standard crimp contact material consists of copper alloy with silver plating. Please see pages A-20 - A-21 for additional contact information.
3. Insert arrangements IAW VG95234. Please see pages A-12 - A-19.
4. Standard insert is synthetic rubber, oil and low temperature resistant (-55°C to +125°C) IAW MIL-R-3065.
5. All dimensions are metric unless otherwise noted.

Dimensions in millimeters are subject to change without notice.

© 2017 Glenair, Inc. U.S. CAGE Code 06324 Printed in Italy

VG95234 B1 and VG95234 B2
Rear Panel Wall Mount Receptacle with Threaded (B1) and Thru-Holes (B2)

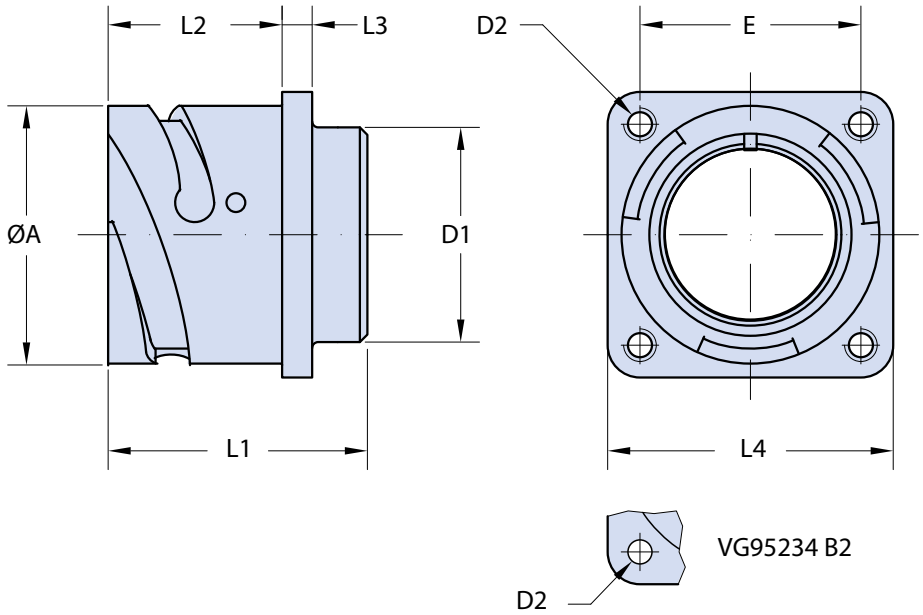

TABLE I: DIMENSIONS

Shell Size	ØA +0 -0.15	D1 Max	D2		E ±0.1	L1 ±0.3	L2 +0.4 -0	L3 ±0.2	L4 ±0.3	Weight gr. Max
			B1	B2 H13						
10 SL	18.2	16.2	M4	3.2	18.2	24.7	18.2	2.8	25.4	14
14 S	24.6	19.2	M4	3.2	23.0	24.7	18.2	3.2	30.0	21
16 S	27.4	22.4	M4	3.2	24.6	24.7	18.2	3.2	32.5	22
16	27.4	22.4	M4	3.2	24.6	33.8	23.05	3.2	32.5	27
18	30.8	25.6	M4	3.2	27.0	33.8	23.05	4.0	35.0	33
20	34.2	29.0	M4	3.2	29.4	33.8	23.05	4.0	38.0	37
22	37.4	32.2	M4	3.2	31.8	33.8	23.05	4.0	41.0	42
24	40.9	35.3	M4	3.7	34.9	33.8	23.05	4.0	44.5	48
28	46.7	41.4	M5	3.7	39.7	33.8	24.05	4.0	50.8	58
32	53.4	47.8	M5	4.3	44.5	33.8	24.05	4.0	57.0	72
36	59.6	54.1	M5	4.3	49.2	33.8	24.05	4.0	63.5	84

Dimensions in millimeters are subject to change without notice.

© 2017 Glenair, Inc. U.S. CAGE Code 06324 Printed in Italy

VG95234 C1 and VG95234 C2
Bulkhead Feed-Thru Receptacle with Threaded (C1) and Thru-Holes (C2)

Basic Part Number		Contact Arrangement		Alternate Insert Rotation W - X - Y - Z (N = Normal)
VG95234	C1	32-6	P/S	N

C1 - Bulkhead Feed-Thru with: **C1** - Threaded Holes, **C2** - Thru Holes

P/S - Pin/Socket Solid Contacts

Application Notes

1. Bulkhead feed-thru receptacle with threaded or through mounting holes.
2. Solid contact material consists of copper alloy with silver plating.
3. Insert arrangements IAW VG95234. Please see pages A-12 - A-19.
4. Standard insert is synthetic rubber, oil and low temperature resistant (-55°C to +125°C) IAW MIL-R-3065.
5. All dimensions are metric unless otherwise noted.
6. Male contacts: Front mount (02) Female contacts: Rear mount (03)

Dimensions in millimeters are subject to change without notice.

© 2017 Glenair, Inc. U.S. CAGE Code 06324 Printed in Italy

VG95234 C1 and VG95234 C2
Bulkhead Feed-Thru Receptacle with Threaded (C1) and Thru-Holes (C2)

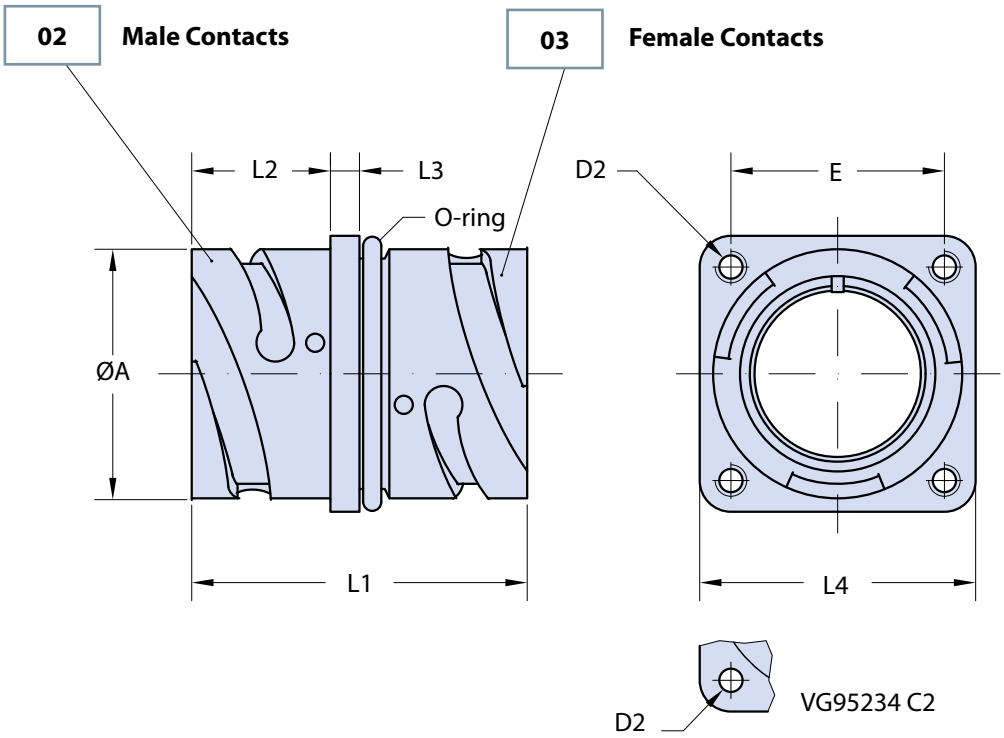

TABLE I: DIMENSIONS

Shell Size	ØA +0 -0.15	D2		E ±0.1	L1 ±0.3	L2 +0.4 -0	L3 ±0.2	L4 ±0.3	Weight gr. Max
		B1	B2 H13						
10 SL	18.2	M4	3.2	18.2	37.5	14.2	2.8	25.4	17
14 S	24.6	M4	3.2	23.0	37.5	14.2	3.2	30.0	29
16 S	27.4	M4	3.2	24.6	37.5	14.2	3.2	32.5	34
16	27.4	M4	3.2	24.6	51.4	19.0	3.2	32.5	41
18	30.8	M4	3.2	27.0	51.4	19.0	4.0	35.0	49
20	34.2	M4	3.2	29.4	51.4	19.0	4.0	38.0	56
22	37.4	M4	3.2	31.8	51.4	19.0	4.0	41.0	61
24	40.9	M4	3.7	34.9	51.4	20.6	4.0	44.5	65
28	46.7	M5	3.7	39.7	51.4	20.6	4.0	50.8	76
32	53.4	M5	4.3	44.5	51.4	22.2	4.0	57.0	92
36	59.6	M5	4.3	49.2	51.4	22.2	4.0	63.5	103

Dimensions in millimeters are subject to change without notice.

© 2017 Glenair, Inc. U.S. CAGE Code 06324 Printed in Italy

VG95234 D
Straight Plug with Cable Clamp, Bushing and Wire Sealing Grommet

Basic Part Number		Contact Arrangement	1 - Standard AWG Contacts (Omit for Metric)		Modification Codes Omitted for Standard Version 1 - Connector Less Contacts	
VG95234	D	32-6	P	1	N	1
	D - Straight Plug with Cable Clamp and Bushing		P - Pin contacts S - Socket contacts		Alternate Insert Rotation W - X - Y - Z (N = Normal)	

Application Notes

1. Straight plug connector complete with wire sealing grommet, cable clamp and bushing.
2. Standard crimp contact material consists of copper alloy with silver plating. Please see pages A-20 - A-21 for additional contact information.
3. Insert arrangements IAW VG95234. Please see pages A-12 - A-19.
4. Standard insert is synthetic rubber, oil and low temperature resistant (-55°C to +125°C) IAW MIL-R-3065.
5. All dimensions are metric unless otherwise noted.

Dimensions in millimeters are subject to change without notice.

© 2017 Glenair, Inc. U.S. CAGE Code 06324 Printed in Italy

VG95234 D
Straight Plug with Cable Clamp, Bushing and Wire Sealing Grommet

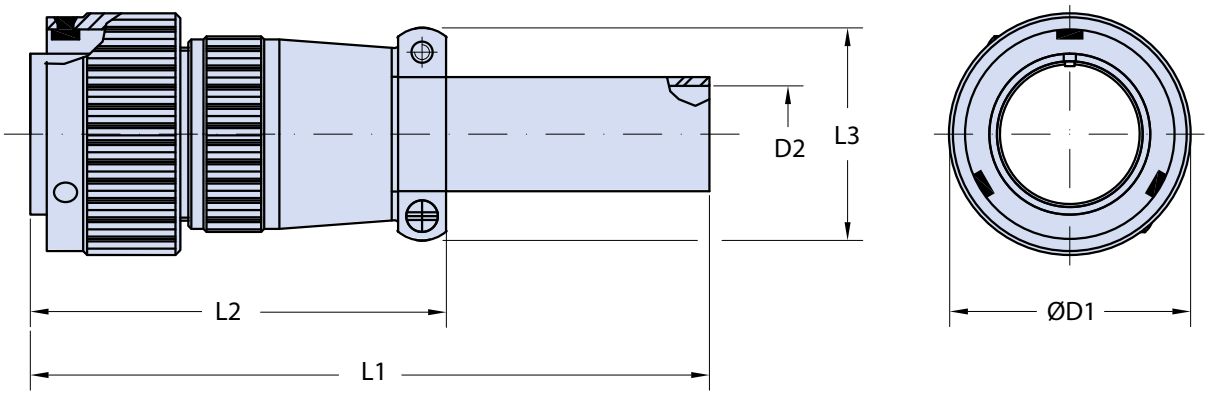

TABLE I: DIMENSIONS

Shell Size	ØD1 Max	D2 Max	L1 Max	L2 Max	L3 Max	Weight gr. Max
10 SL	22.8	6.5	115	53.8	21.7	30
14 S	29.2	9.0	115	56.5	24.9	44
16 S	32.0	11.0	115	55.0	28.0	54
16	32.0	11.0	120	70.5	28.0	62
18	36.5	14.2	120	73.2	29.6	70
20	39.9	15.8	120	74.7	36.0	85
22	43.1	15.8	120	73.7	36.0	92
24	46.6	21.4	120	76.5	40.75	127
28	53.4	21.4	120	83.2	43.1	154
32	60.1	26.7	120	83.0	56.0	199
36	66.3	31.7	130	93.0	59.0	260

Dimensions in millimeters are subject to change without notice.

© 2017 Glenair, Inc. U.S. CAGE Code 06324 Printed in Italy

VG95234 E
90° Plug with Cable Clamp, Bushing and Wire Sealing Grommet

Basic Part Number		Contact Arrangement	1 - Standard AWG Contacts (Omit for Metric)		Modification Codes Omitted for Standard Version 1 - Connector Less Contacts	
VG95234	E	32-6	P	1	N	1
	E - 90° Plug with Cable Clamp and Bushing		P - Pin contacts S - Socket contacts		Alternate Insert Rotation W - X - Y - Z (N = Normal)	

Application Notes

1. 90° Plug connector with wire sealing grommet, cable clamp and bushing.
2. Standard crimp contact material consists of copper alloy with silver plating. Please see pages A-20 - A-21 for additional contact information.
3. Insert arrangements IAW VG95234. Please see pages A-12 - A-19.
4. Standard insert is synthetic rubber, oil and low temperature resistant (-55°C to +125°C) IAW MIL-R-3065.
5. All dimensions are metric unless otherwise noted.

Dimensions in millimeters are subject to change without notice.

© 2017 Glenair, Inc. U.S. CAGE Code 06324 Printed in Italy

VG95234 E
90° Plug with Cable Clamp, Bushing and Wire Sealing Grommet

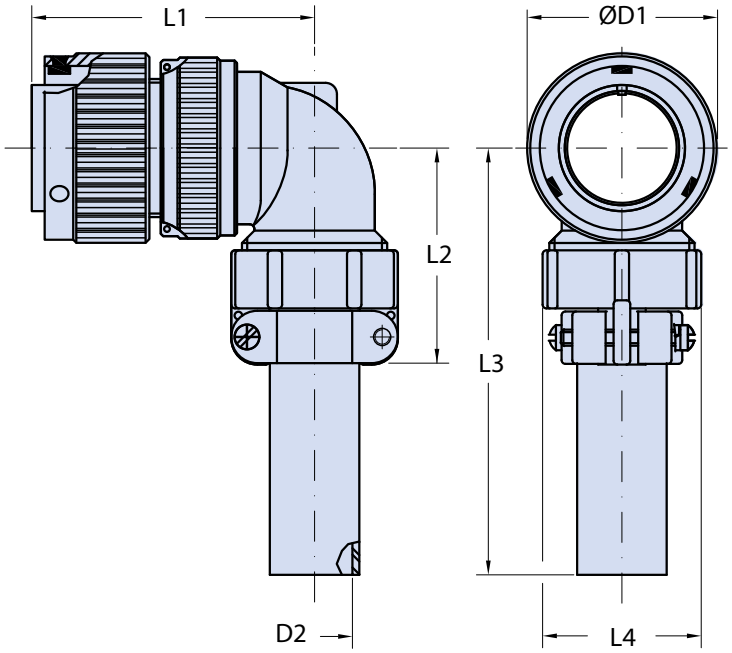

TABLE I: DIMENSIONS

Shell Size	ØD1 Max	D2 Max	L1 Max	L2 Max	L3 Max	L4 Max	Weight gr. Max
10 SL	22.8	6.5	44.3	37.2	100	22.7	37
14 S	29.2	9.0	46.2	40.5	100	27.5	58
16 S	32.0	11.0	49.7	42.8	100	30.0	68
16	32.0	11.0	56.7	42.8	100	30.0	78
18	36.5	14.2	58.2	45.8	100	33.0	90
20	39.9	15.8	62.8	47.8	100	37.5	109
22	43.1	15.8	63.5	46.7	100	37.5	113
24	46.6	21.4	67.2	54.4	100	43.3	159
28	53.4	21.4	68.0	55.7	100	48.0	181
32	60.1	26.7	72.7	62.5	100	55.0	245
36	66.3	31.7	76.2	65.2	100	58	300

Dimensions in millimeters are subject to change without notice.

© 2017 Glenair, Inc. U.S. CAGE Code 06324 Printed in Italy

VG95234 E1 and VG95234 K
90° Plug with Conduit Adapter

Basic Part Number		Contact Arrangement	1 - Standard AWG Contacts (Omit for Metric)		Modification Codes Omitted for Standard Version 1 - Connector Less Contacts	
VG95234	E1	32-6	P	1	N	1
	E1 - 90° Plug without Grounding Fingers K - 90° Plug withGrounding Fingers		P - Pin contacts S - Socket contacts		Alternate Insert Rotation W - X - Y - Z (N = Normal)	

Application Notes

1. 90° Plug connector with conduit adapter.
2. Standard crimp contact material consists of copper alloy with silver plating. Please see pages A-20 - A-21 for additional contact information.
3. Insert arrangements IAW VG95234. Please see pages A-12 - A-19.
4. Standard insert is synthetic rubber, oil and low temperature resistant (-55°C to +125°C) IAW MIL-R-3065.
5. All dimensions are metric unless otherwise noted.

Dimensions in millimeters are subject to change without notice.

© 2017 Glenair, Inc. U.S. CAGE Code 06324 Printed in Italy

VG95234 E1and VG95234 K
90° Plug with Conduit Adapter

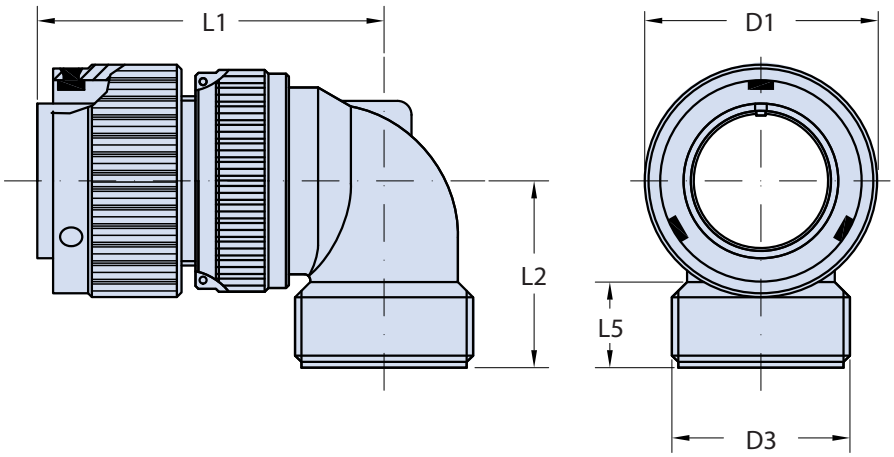

TABLE I: DIMENSIONS

Shell Size	ØD1 Max	D3	L1 Max	L2 Max	L5 Min	Weight gr. Max
10SL	22.8	0.6250 - 24UNEF	44.3	26.8	9.4	27
14S	29.2	0.7500 - 20UNEF	46.2	28.5	9.4	43
16S	32.0	0.8750 - 20UNEF	49.7	29.0	9.4	48
16	32.0	0.8750 - 20UNEF	56.7	29.0	9.4	58
18	36.5	1.0000 - 20UNEF	58.2	32.0	9.4	58
20	39.9	1.1875 - 18NEF	62.8	34.0	9.4	74
22	43.1	1.1875 - 18NEF	63.5	32.9	9.4	78
24	46.6	1.4375 - 18NEF	67.2	39.0	9.4	104
28	53.4	1.4375 - 18NEF	68.0	40.3	9.4	126
32	60.1	1.7500 - 18NS	72.7	47.5	11.0	160
36	66.3	2.0000 - 18NS	76.2	49.2	12.6	190

Dimensions in millimeters are subject to change without notice.

© 2017 Glenair, Inc. U.S. CAGE Code 06324 Printed in Italy

VG95234 F
In Line Receptacle with Cable Clamp, Bushing and Wire Sealing Grommet

Basic Part Number		Contact Arrangement	1 - Standard AWG Contacts (Omit for Metric)		Modification Codes Omitted for Standard Version; 1 - Connector Less Contacts	
VG95234	F	32-6	S	1	N	1
	F - In-Line Receptacle with Cable Clamp and Bushing		P - Pin contacts; S - Socket contacts		Alternate Insert Rotation W - X - Y - Z (N = Normal)	

Application Notes

1. In-Line connector with: cable clamp and bushing.
2. Standard crimp contact material consists of copper alloy with silver plating. Please see pages A-20 - A-21 for additional contact information.
3. Insert arrangements IAW VG95234. Please see pages A-12 - A-19.
4. Standard insert is synthetic rubber, oil and low temperature resistant (-55°C to +125°C) IAW MIL-R-3065.
5. All dimensions are metric unless otherwise noted.

Dimensions in millimeters are subject to change without notice.

© 2017 Glenair, Inc. U.S. CAGE Code 06324 Printed in Italy

VG95234 F
In Line Receptacle with Cable Clamp, Bushing and Wire Sealing Grommet

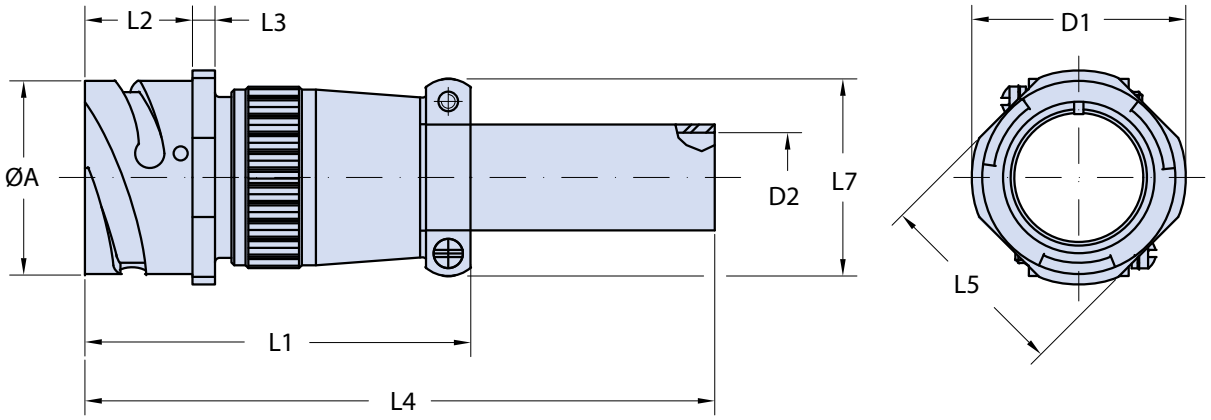

TABLE I: DIMENSIONS

Shell Size	ØA +0 -0.15	D1 Max	D2 Max	L1 Max	L2 ±0.4 -0	L3 ±0.2	L4 Max	L5 ±0.2	L7 Max	Weight gr. Max
10 SL	18.2	25.2	6.5	53.8	18.2	2.8	120	20.6	21.7	35
14 S	24.6	29.8	9.0	56.5	18.2	3.2	120	25.4	24.9	50
16 S	27.4	32.3	11.0	55.0	18.2	3.2	120	28.6	28.0	60
16	27.4	32.3	11.0	70.5	21.5	3.2	125	28.6	28.0	65
18	30.8	34.8	14.2	73.2	23.05	4.0	125	31.7	29.6	80
20	34.2	37.8	15.8	74.7	23.05	4.0	125	34.9	36.0	95
22	37.4	41.1	15.8	73.7	23.05	4.0	125	38.1	36.0	105
24	40.9	44.6	21.4	76.5	23.05	4.0	125	41.3	40.75	140
28	46.7	50.9	21.4	83.2	24.05	4.0	125	47.6	43.1	160
32	53.4	57.1	26.7	83.0	24.05	4.0	125	54.0	56.0	205
36	59.6	63.6	31.7	93.0	24.05	4.0	135	60.6	59.0	270

Dimensions in millimeters are subject to change without notice.

© 2017 Glenair, Inc. U.S. CAGE Code 06324 Printed in Italy

VG95234 G and VG95234 T
Straight Plug with Heat Shrink Boot Adapter

Basic Part Number		Contact Arrangement	1 - Standard AWG Contacts (Omit for Metric)		Modification Codes Omitted for Standard Version 1 - Connector Less Contacts	
VG95234	G	32-6	P	1	N	1

G - Straight Plug without Grounding Fingers
T - Straight Plug with Grounding Fingers

P - Pin contacts
S - Socket contacts

Alternate Insert Rotation
W - X - Y - Z
(**N** = Normal)

Application Notes

1. Straight plug connector with wire sealing grommet and shrink boot adapter.
2. Standard crimp contact material consists of copper alloy with silver plating. Please see pages A-20 - A-21 for additional contact information.
3. Insert arrangements IAW VG95234. Please see pages A-12 - A-19.
4. Standard insert is synthetic rubber, oil and low temperature resistant (-55°C to +125°C) IAW MIL-R-3065.
5. All dimensions are metric unless otherwise noted.

Dimensions in millimeters are subject to change without notice.

© 2017 Glenair, Inc.
U.S. CAGE Code 06324 Printed in Italy

VG95234 G and VG95234 T
Straight Plug with Heat Shrink Boot Adapter

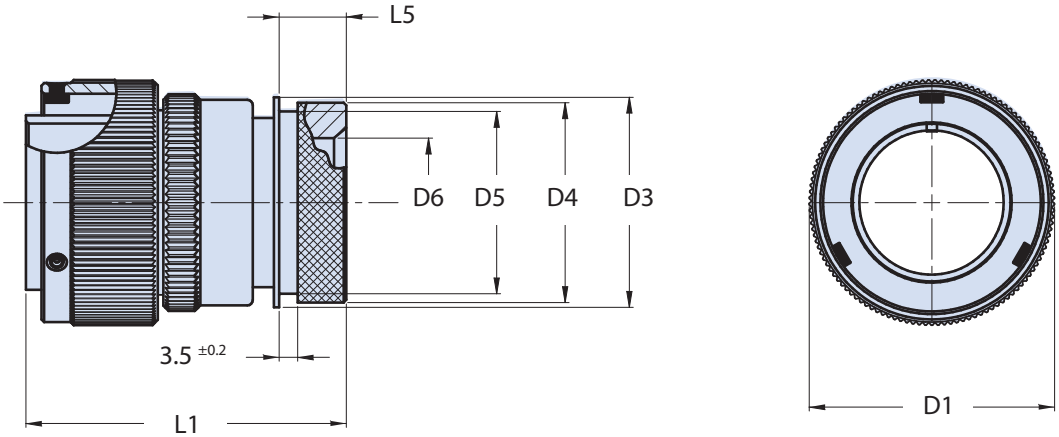

TABLE I: DIMENSIONS

Shell Size	ØD1 Max	D3 ±0.2	D4 ±0.2	D5 Max	D6 Min	L1 Max	L5 ±0.5	Weight gr. Max
10SL	22.8	17.0	15.5	13.3	7.7	51.6	11.7	26
14S	29.2	20.1	19.1	17.0	10.6	51.6	11.7	43
16S	32.0	23.5	23.9	21.9	13.5	51.6	11.7	53
16	32.0	23.5	23.9	21.9	13.5	59.4	11.5	60
18	36.5	26.5	23.9	21.9	14.6	61.4	11.5	67
20	39.9	30.2	29.6	26.2	18.7	63.9	12.7	77
22	43.1	33.6	29.6	26.2	20.8	62.6	12.7	82
24	46.6	36.1	37.8	34.5	24.6	62.6	12.7	97
28	53.4	41.4	37.8	34.5	27.0	65.0	12.7	122
32	60.1	48.6	47.8	43.6	33.3	67.6	15.2	167
36	66.3	54.8	47.8	43.6	38.5	68.4	15.2	182

Dimensions in millimeters are subject to change without notice.

© 2017 Glenair, Inc. U.S. CAGE Code 06324 Printed in Italy

VG95234 H
Straight Plug with Conduit Adapter

Basic Part Number		Contact Arrangement		1 - Standard AWG Contacts (Omit for Metric)	Modification Codes Omitted for Standard Version 1 - Connector Less Contacts	
VG95234	H	32-6	P	1	N	1
	H - Straight Plug without Grounding Fingers		P - Pin contacts S - Socket contacts		Alternate Insert Rotation W - X - Y - Z (N = Normal)	

Application Notes

1. Straight Plug connector.
2. Standard crimp contact material consists of copper alloy with silver plating. Please see pages A-20 - A-21 for additional contact information.
3. Insert arrangements IAW VG95234. Please see pages A-12 - A-19.
4. Standard insert is synthetic rubber, oil and low temperature resistant (-55°C to +125°C) IAW MIL-R-3065.
5. All dimensions are metric unless otherwise noted.

Dimensions in millimeters are subject to change without notice.

© 2017 Glenair, Inc. U.S. CAGE Code 06324 Printed in Italy

VG95234 H
Straight Plug with Conduit Adapter

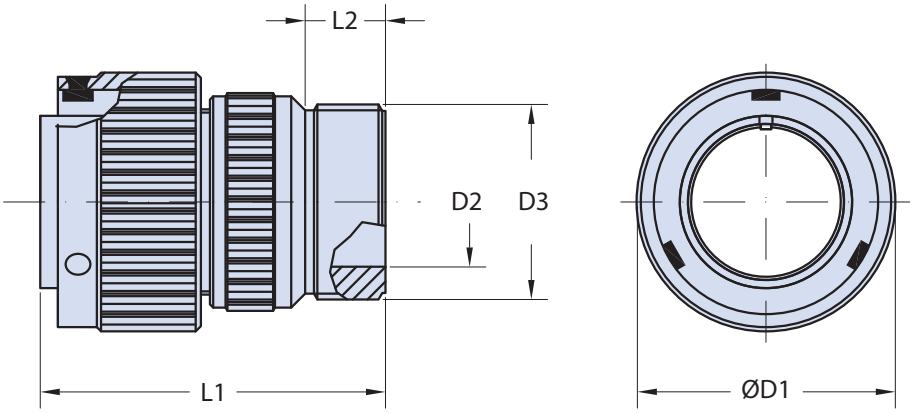

TABLE I: DIMENSIONS

Shell Size	ØD1 Max	D2 Min	D3	L1 Max	L2 Min	Weight gr. Max
10SL	22.8	8.2	0.6250 - 24UNEF	44.3	9.5	21
14S	29.2	11.1	0.7500 - 20UNEF	48.8	9.5	33
16S	32.0	14.3	0.8750 - 20UNEF	45.4	9.5	42
16	32.0	14.3	0.8750 - 20UNEF	54.6	9.5	51
18	36.5	16.7	1.0000 - 20UNEF	53.5	9.5	59
20	39.9	19.8	1.1875 - 18NEF	56.0	9.5	58
22	43.1	19.8	1.1875 - 18NEF	62.0	9.5	62
24	46.6	25.4	1.4375 - 18NEF	55.0	9.5	84
28	53.4	27.0	1.4375 - 18NEF	66.5	9.5	100
32	60.1	32.5	1.7500 - 18NS	66.7	11.0	116
36	66.3	35.7	2.0000 - 18NS	69.1	11.8	142

Dimensions in millimeters are subject to change without notice.

© 2017 Glenair, Inc. U.S. CAGE Code 06324 Printed in Italy

VG95234 J1 and VG95234 J2
Wall Mount Receptacle with Cable Clamp, Bushing and Wire Sealing Grommet With Threaded (J1) and Thru-Holes (J2)

Basic Part Number		Contact Arrangement	1 - Standard AWG Contacts (Omit for Metric)		Modification Codes Omitted for Standard Version 1 - Connector Less Contacts	
VG95234	J1	32-6	P	1	N	1
Wall Mount Receptacle with Cable Clamp and Bushing and... J1 - Threaded Holes J2 - Thru-Holes			P - Pin contacts S - Socket contacts		Alternate Insert Rotation W - X - Y - Z (N = Normal)	

Application Notes

1. Wall mount receptacle with wire sealing grommet, cable clamp and bushing.
2. Standard crimp contact material consists of copper alloy with silver plating. Please see pages A-20 - A-21 for additional contact information.
3. Insert arrangements IAW VG95234. Please see pages A-12 - A-19.
4. Standard insert is synthetic rubber, oil and low temperature resistant (-55°C to +125°C) IAW MIL-R-3065.
5. All dimensions are metric unless otherwise noted.

Dimensions in millimeters are subject to change without notice.

© 2017 Glenair, Inc. U.S. CAGE Code 06324 Printed in Italy

VG95234 J1 and VG95234 J2
Wall Mount Receptacle
with Cable Clamp, Bushing and Wire Sealing Grommet
With Threaded (J1) and Thru-Holes (J2)

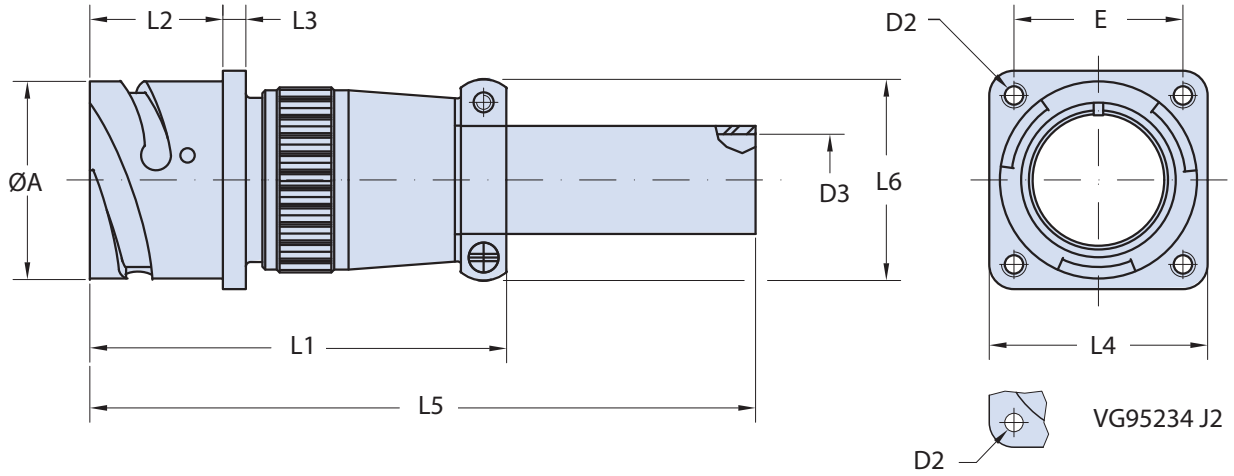

TABLE I: DIMENSIONS

Shell Size	ØA +0 -0.15	D2 J1	D2 J2 H13	D3 Max	E ±0.1	L1 Max	L2 +0.4 -0	L3 ±0.2	L4 ±0.3	L5 Max	L6 Max	Weight gr. Max
10SL	18.2	M4	3.2	6.5	18.2	53.8	18.2	2.8	25.4	120	21.7	35
14S	24.6	M4	3.2	9.0	23.0	56.5	18.2	3.2	30.0	120	24.9	50
16S	27.4	M4	3.2	11.0	24.6	55.0	18.2	3.2	32.5	120	28.0	60
16	27.4	M4	3.2	11.0	24.6	70.5	21.5	3.2	32.5	125	28.0	65
18	30.8	M4	3.2	14.2	27.0	73.2	23.05	4.0	35.0	125	29.6	80
20	34.2	M4	3.2	15.8	29.4	74.7	23.05	4.0	38.0	125	36.0	95
22	37.4	M4	3.2	15.8	31.8	73.7	23.05	4.0	41.0	125	36.0	105
24	40.9	M4	3.7	21.4	34.9	76.5	23.05	4.0	44.5	125	40.75	140
28	46.7	M5	3.7	21.4	39.7	83.2	24.05	4.0	50.8	125	43.1	160
32	53.4	M5	4.3	26.7	44.5	83.0	24.05	4.0	57.0	125	56.0	205
36	59.6	M5	4.3	31.7	49.2	93.0	24.05	4.0	63.5	135	59.0	270

Dimensions in millimeters are subject to change without notice.

© 2017 Glenair, Inc. U.S. CAGE Code 06324 Printed in Italy

VG95234 M
Straight Plug with EMI/RFI Backshell, Grounding Fingers, Wire Sealing Grommet and Heat Shrink Boot Adapter

Basic Part Number		Contact Arrangement	1 - Standard AWG Contacts (Omit for Metric)		Modification Codes Omitted for Standard Version 1 - Connector Less Contacts	
VG95234	M	32-6	P	1	N	1
	M - Straight Plug with EMI Backshell/ Shrink Boot Adapter and Grounding Fingers		P - Pin contacts S - Socket contacts		Alternate Insert Rotation W - X - Y - Z (N = Normal)	

Application Notes

1. Straight plug connector with EMI backshell and boot adapter.
2. Standard crimp contact material consists of copper alloy with silver plating. Please see pages A-20 - A-21 for additional contact information.
3. Insert arrangements IAW VG95234. Please see pages A-12 - A-19.
4. Standard insert is synthetic rubber, oil and low temperature resistant (-55°C to +125°C) IAW MIL-R-3065.
5. All dimensions are metric unless otherwise noted.

Dimensions in millimeters are subject to change without notice.

© 2017 Glenair, Inc. U.S. CAGE Code 06324 Printed in Italy

VG95234 M
Straight Plug with EMI/RFI Backshell, Grounding Fingers, Wire Sealing Grommet and Heat Shrink Boot Adapter

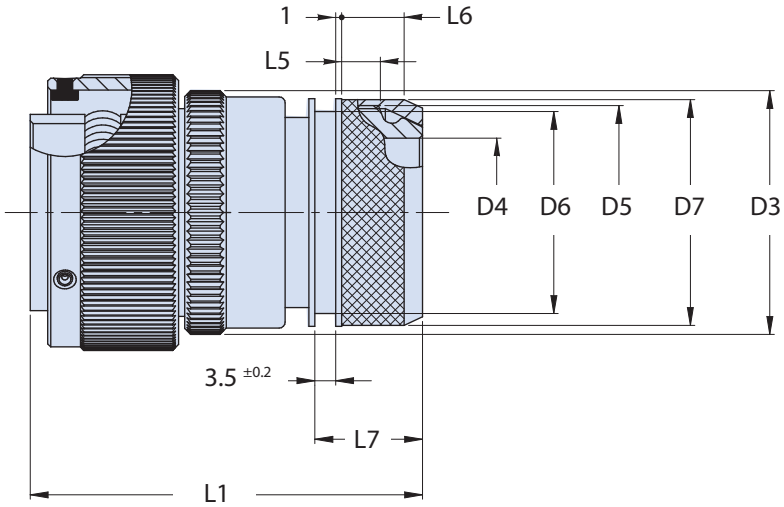

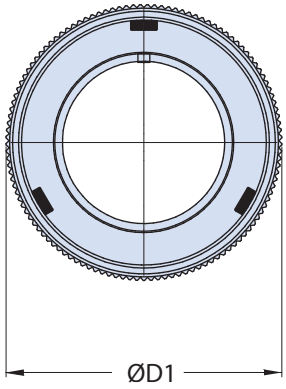

TABLE I: DIMENSIONS

Shell Size	ØD1 Max	D3 Max	D4 Min	D5	D6 Max	D7 ±0.5	L1 Max	L5 Min	L6 +1 -0	L7 +1 -0	Weight gr. Max
10SL	22.8	22	8.6	M16x1	16.3	18.5	56.8	4.5	7	17	40
14S	29.2	25	10.6	M20x1	20.0	22.0	57.8	5.0	7	17	45
16S	32.0	28	13.5	M23x1	23.0	25.0	61.0	6.0	8	18	55
16	32.0	28	13.5	M23x1	23.0	25.0	66.0	6.0	8	18	65
18	36.5	31	14.6	M26x1	24.5	28.0	68.0	6.0	10	18	75
20	39.9	35	18.5	M30x1	28.5	32.0	69.3	6.0	10	18	85
22	43.1	38	20.8	M32x1	30.5	34.0	68.0	6.0	10	18	100
24	46.6	41	24.6	M36x1	34.5	38.0	68.2	6.0	10	18	115
28	53.4	48	27.0	M39x1	37.5	41.0	70.5	6.0	10	18	130
32	60.1	54	33.3	M45x1	44.0	48.0	70.5	6.0	10	18	170
36	66.3	61	38.5	M52x1	51.0	55.0	70.7	6.0	10	18	190

Dimensions in millimeters are subject to change without notice.

© 2017 Glenair, Inc. U.S. CAGE Code 06324 Printed in Italy

VG95234 N1 and VG95234 N2
Wall Mount Receptacle with EMI/RFI Backshell, Heat Shrink Boot Adapter and Sealing Grommet

Basic Part Number		Contact Arrangement	1 - Standard AWG Contacts (Omit for Metric)		Modification Codes Omitted for Standard Version 1 - Connector Less Contacts	
VG95234	N1	32-6	S	1	N	1
	Wall Mount Receptacle with EMI Backshell/Shrink Boot Adapter and... N1 - Threaded Holes N2 - Thru-Holes		P - Pin contacts S - Socket contacts		Alternate Insert Rotation W - X - Y - Z (N = Normal)	

Application Notes

1. Wall mount receptacle with EMI backshell and shrink boot adapter.
2. Standard crimp contact material consists of copper alloy with silver plating. Please see pages A-20 - A-21 for additional contact information.
3. Insert arrangements IAW VG95234. Please see pages A-12- A-19.
4. Standard insert is synthetic rubber, oil and low temperature resistant (-55°C to +125°C) IAW MIL-R-3065.
5. All dimensions are metric unless otherwise noted.

Dimensions in millimeters are subject to change without notice.

© 2017 Glenair, Inc. U.S. CAGE Code 06324 Printed in Italy

VG95234 N1 and VG95234 N2
Wall Mount Receptacle with EMI/RFI Backshell, Heat Shrink Boot Adapter and Sealing Grommet

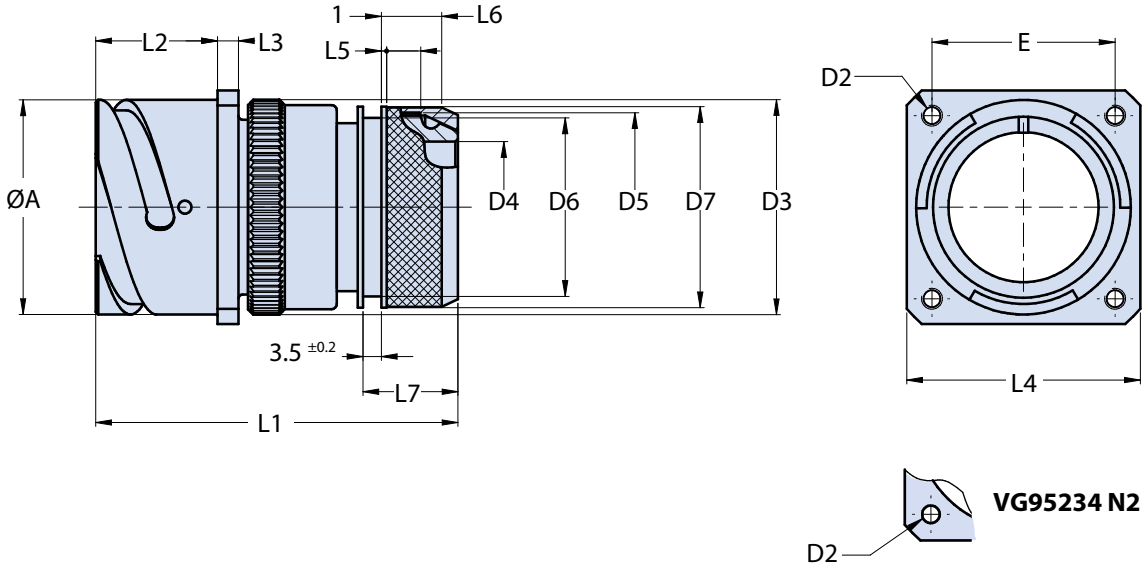

TABLE I: DIMENSIONS

Shell Size	ØA +0 -0.15	D2		D3 Max	D4 Min	D5	D6 Max	D7 ±0.5	E ±0.1	L1 Max	L2 +0.4 -0	L3 ±0.2	L4 ±0.3	L5 Min	L6 +1 -0	L7 +1 -0	Weight gr. Max
		N1	N2 H13														
10 SL	18.2	M4	3.2	22	8.6	M16x1	16.3	18.5	18.2	56.8	18.2	2.8	25.4	4.5	7	17	45
14 S	24.6	M4	3.2	25	10.6	M20x1	20.0	22.0	23.0	57.8	18.2	3.2	30.0	5.0	7	17	55
16 S	27.4	M4	3.2	28	13.5	M23x1	23.0	25.0	24.6	61.0	18.2	3.2	32.5	6.0	8	18	65
16	27.4	M4	3.2	28	13.5	M23x1	23.0	25.0	24.6	66.0	21.5	3.2	32.5	6.0	8	18	75
18	30.8	M4	3.2	31	14.6	M26x1	24.5	28.0	27.0	68.0	23.05	4.0	35.0	6.0	10	18	85
20	34.2	M4	3.2	35	18.5	M30x1	28.5	32.0	29.4	69.3	23.05	4.0	38.0	6.0	10	18	95
22	37.4	M4	3.2	38	20.8	M32x1	30.5	34.0	31.8	68.0	23.05	4.0	41.0	6.0	10	18	105
24	40.9	M4	3.7	41	24.6	M36x1	34.5	38.0	34.9	68.2	23.05	4.0	44.5	6.0	10	18	120
28	46.7	M5	3.7	48	27.0	M39x1	37.5	41.0	39.7	70.5	24.05	4.0	50.8	6.0	10	18	150
32	53.4	M5	4.3	54	33.3	M45x1	44.0	48.0	44.5	70.5	24.05	4.0	57.0	6.0	10	18	190
36	59.6	M5	4.3	61	38.5	M52x1	51.0	55.0	49.2	70.7	24.05	4.0	63.5	6.0	10	18	220

Dimensions in millimeters are subject to change without notice.

© 2017 Glenair, Inc. U.S. CAGE Code 06324 Printed in Italy

VG95234 U1 and VG95234 U2
Rear Wall Mount Receptacle with Heat Shrink Boot Adapter and Sealing Grommet

Basic Part Number		Contact Arrangement	1 - Standard AWG Contacts (Omit for Metric)		Modification Codes Omitted for Standard Version 1 - Connector Less Contacts	
VG95234	U1	32-6	S	1	N	1
	Rear Wall Mount Receptacle with Heat Shrink Boot Adapter U1 - Threaded Holes U2 - Thru-Holes		P - Pin contacts S - Socket contacts		Alternate Insert Rotation W - X - Y - Z (N = Normal)	

Application Notes

1. Rear wall mount receptacle with heat shrink boot adapter.
2. Standard crimp contact material consists of copper alloy with silver plating. Please see pages A-20 - A-21 for additional contact information.
3. Insert arrangements IAW VG95234. Please see pages A-12 - A-19.
4. Standard insert is synthetic rubber, oil and low temperature resistant (-55°C to +125°C) IAW MIL-R-3065.
5. All dimensions are metric unless otherwise noted.

Dimensions in millimeters are subject to change without notice.

© 2017 Glenair, Inc. U.S. CAGE Code 06324 Printed in Italy

VG95234 U1 and VG95234 U2
Rear Wall Mount Receptacle with Heat Shrink Boot Adapter and Sealing Grommet

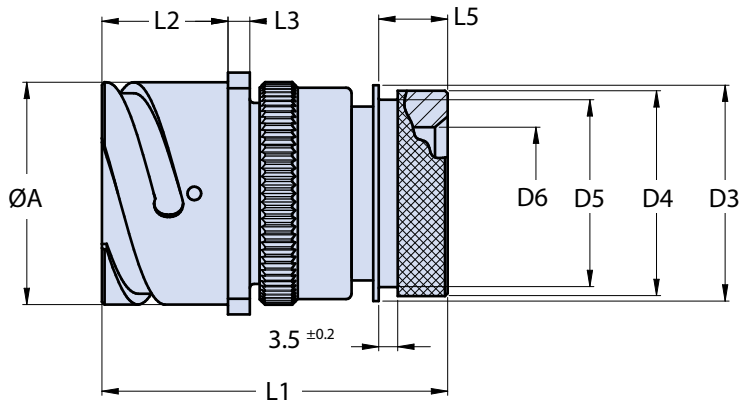

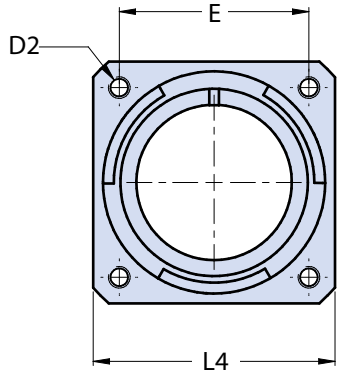

TABLE I: DIMENSIONS

Shell Size	ØA +0 -0.15	D2 B1	D2 B2 H13	D3 ±0.2	D4 ±0.2	D5 Max	D6 Min	E ±0.1	L1 Max	L2 +0.4 -0	L3 ±0.2	L4 ±0.3	L5 ±0.5	Weight gr. Max
10 SL	18.2	M4	3.2	17.0	15.5	13.3	7.7	18.2	51.6	18.2	2.8	25.4	11.7	45
14 S	24.6	M4	3.2	20.1	19.1	17.0	10.6	23.0	51.6	18.2	3.2	30.0	11.7	53
16 S	27.4	M4	3.2	23.5	23.9	21.9	13.5	24.6	51.6	18.2	3.2	32.5	11.7	63
16	27.4	M4	3.2	23.5	23.9	21.9	13.5	24.6	59.4	21.5	3.2	32.5	11.5	73
18	30.8	M4	3.2	26.5	23.9	21.9	14.6	27.0	61.4	23.05	4.0	35.0	11.5	83
20	34.2	M4	3.2	30.2	29.6	26.2	18.7	29.4	63.9	23.05	4.0	38.0	12.7	93
22	37.4	M4	3.2	33.6	29.6	26.2	20.8	31.8	62.6	23.05	4.0	41.0	12.7	103
24	40.9	M4	3.7	36.1	37.8	34.5	24.6	34.9	62.6	23.05	4.0	44.5	12.7	118
28	46.7	M5	3.7	41.4	37.8	34.5	27.0	39.7	65.0	24.05	4.0	50.8	12.7	148
32	53.4	M5	4.3	48.6	47.8	43.6	33.3	44.5	67.6	24.05	4.0	57.0	15.2	188
36	59.6	M5	4.3	54.8	47.8	43.6	38.5	49.2	68.4	24.05	4.0	63.5	15.2	218

Dimensions in millimeters are subject to change without notice.

© 2017 Glenair, Inc. U.S. CAGE Code 06324 Printed in Italy

VG95234 V
In-Line Receptacle with Heat Shrink Boot Adapter

Basic Part Number		Contact Arrangement	1 - Standard AWG Contacts (Omit for Metric)		Modification Codes Omitted for Standard Version 1 - Connector Less Contacts	
VG95234	V	32-6	P	1	N	1
	V - In-Line Receptacle with Heat Shrink Boot Adapter		P - Pin contacts S - Socket contacts		Alternate Insert Rotation W - X - Y - Z (N = Normal)	

Application Notes

1. In-Line Receptacle with heat shrink boot adapter.
2. Standard crimp contact material consists of copper alloy with silver plating. Please see pages A-20 - A-21 for additional contact information.
3. Insert arrangements IAW VG95234. Please see pages A-12 - A-19.
4. Standard insert is synthetic rubber, oil and low temperature resistant (-55°C to +125°C) IAW MIL-R-3065.
5. All dimensions are metric unless otherwise noted.

Dimensions in millimeters are subject to change without notice.

© 2017 Glenair, Inc. U.S. CAGE Code 06324 Printed in Italy

VG95234 V
In-Line Receptacle with Heat Shrink Boot Adapter

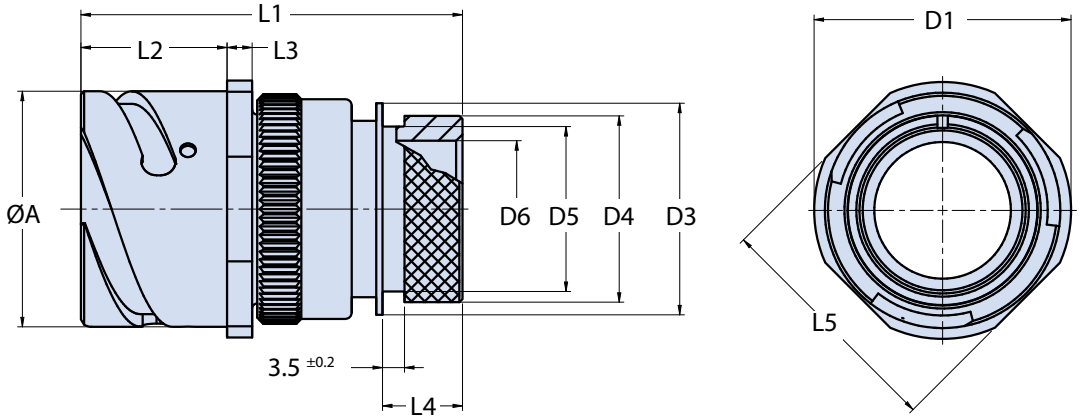

TABLE I: DIMENSIONS

Shell Size	ØA +0 -0.15	D1 Max	D3 Max	D4 Min	D5	D6 Max	L1 Max	L2 +0.4 -0	L3 ±0.2	L4 +1 -0	L5 ±0.3	Weight gr. Max
10 SL	18.2	25.5	22	8.6	M16x1	16.3	57.0	18.2	2.8	11.7	20.6	35
14 S	24.6	29.8	25	10.6	M20x1	20.0	57.0	18.2	3.2	11.7	25.4	50
16 S	27.4	32.3	28	13.5	M23x1	23.0	57.0	18.2	3.2	11.7	28.6	60
16	27.4	32.3	28	13.5	M23x1	23.0	63.0	21.5	3.2	11.5	28.6	65
18	30.8	34.8	31	14.6	M26x1	24.5	65.0	23.05	4.0	11.5	31.7	80
20	34.2	37.8	35	18.5	M30x1	28.5	68.0	23.05	4.0	12.7	34.9	95
22	37.4	41.1	38	20.8	M32x1	30.5	68.0	23.05	4.0	12.7	38.1	105
24	40.9	44.6	41	24.6	M36x1	34.5	70.0	23.05	4.0	12.7	41.3	140
28	46.7	50.9	48	27.0	M39x1	37.5	71.0	24.05	4.0	12.7	47.6	160
32	53.4	57.1	54	33.3	M45x1	44.0	74.0	24.05	4.0	15.2	54.0	205
36	59.6	63.6	61	38.5	M52x1	51.0	74.0	24.05	4.0	15.2	60.6	270

Dimensions in millimeters are subject to change without notice.

© 2017 Glenair, Inc.
U.S. CAGE Code 06324
Printed in Italy

VG95234 KB
Plug Protective Cover With Stainless Steel Chain

Shell size		
VG95234	KB	- 14 S
Basic Part Number	Bayonet Compatible Plug Cover with Stainless Steel Chain	

Application Notes

1. Metal protective cover for bayonet plug connectors with stainless steel chain.
2. Standard materials configuration consists of aluminum alloy with cadmium olive drab passivation IAW QQ-P-416.

Dimensions in millimeters are subject to change without notice.

© 2017 Glenair, Inc. U.S. CAGE Code 06324 Printed in Italy

VG95234 KB
Plug Protective Cover With Stainless Steel Chain

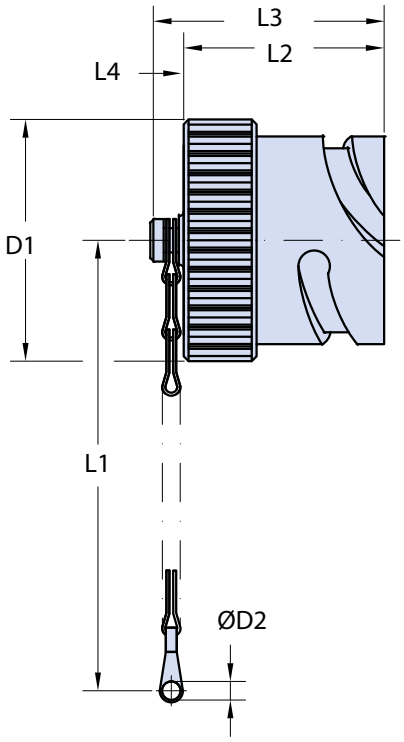

TABLE I: DIMENSIONS

Connector Size	D1 Max	ØD2 +0.6 0	L1 Min	L2 Max	L3 Max	L4 Max	Weight gr. Max
10 SL	21.0	4.2	90	29.5	24.5	1.5	19
14 S	27.5	4.2	100	29.5	24.5	1.5	26
16 S	30.0	4.2	100	29.5	24.5	1.5	28
16	30.0	4.2	115	37.7	33.0	1.5	33
18	33.5	4.2	115	37.7	33.0	1.5	36
20	37.0	4.7	130	37.7	33.0	1.5	43
22	40.0	4.7	130	37.7	33.0	1.5	47
24	43.5	4.7	130	37.7	33.0	1.5	53
28	49.5	4.7	190	37.7	33.0	1.5	63
32	56.0	5.5	190	38.9	34.2	1.5	75
36	62.5	5.5	190	38.9	34.2	1.5	88

Dimensions in millimeters are subject to change without notice.

© 2017 Glenair, Inc.

VG95234 KC
Plug Protective Cover With Polyamide Black Rope

Shell size		
VG95234	KC	- 14 S
Basic Part Number	Rope Lanyard End Termination for Plug Cover	

Application Notes

1. Metal protective cover for bayonet plug connectors with polyamide black rope.
2. Standard materials configuration consists of aluminum alloy with cadmium olive drab passivation IAW QQ-P-416.

Dimensions in millimeters are subject to change without notice.

© 2017 Glenair, Inc. U.S. CAGE Code 06324 Printed in Italy

VG95234 KC
Plug Protective Cover With Polyamide Black Rope*

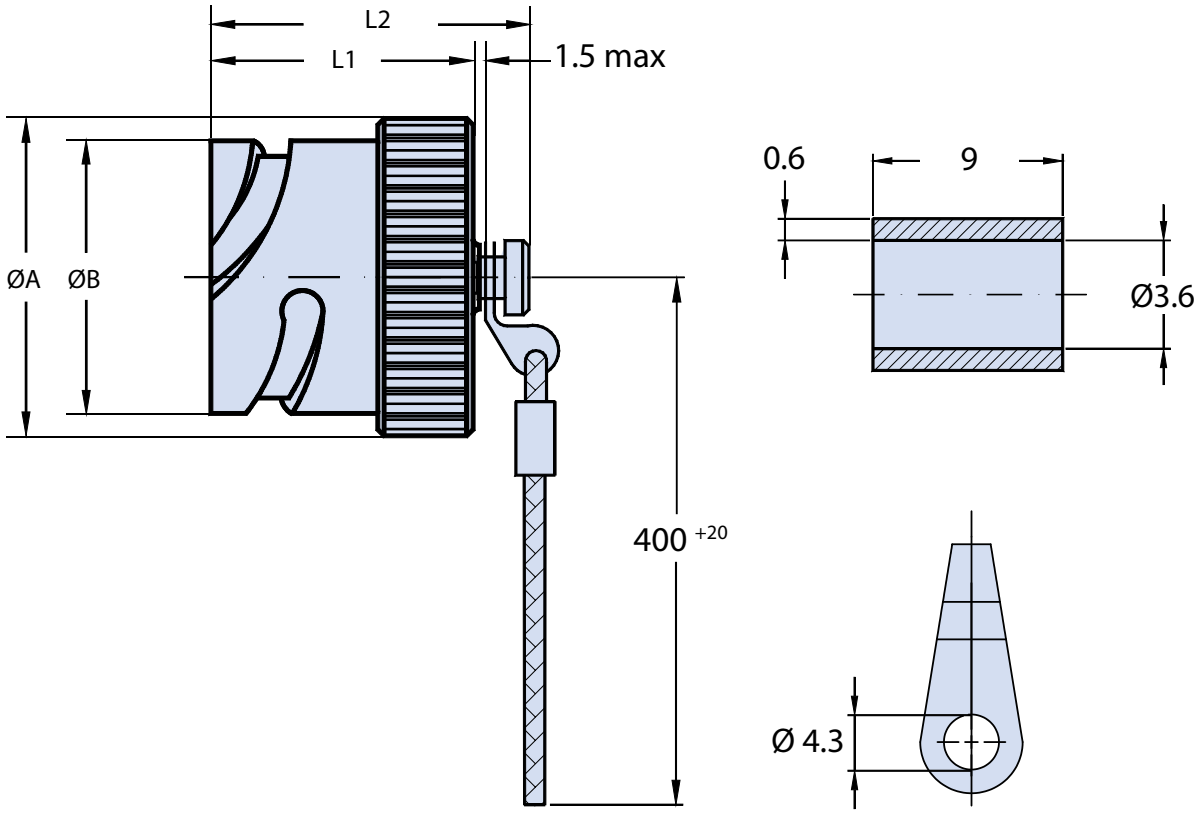

TABLE I: DIMENSIONS

Connector Size	ØA Max.	ØB ±0.1	L1 Max.	L2 Max.	Weight gr. Max
10 SL	22.7	18.2	24.0	29.5	19
14 S	30.0	24.6	24.0	29.5	26
16 S	32.5	27.4	24.0	29.5	28
16	32.5	27.4	33.0	37.7	33
18	36.4	30.8	33.0	37.7	36
20	40.5	34.2	33.0	37.7	43
22	43.5	37.4	33.0	37.7	47
24	46.5	40.9	33.0	37.7	53
28	54.0	46.7	33.0	37.7	63
32	60.0	53.4	34.2	38.9	75
36	66.2	59.6	34.2	38.9	88

CRIMPING TOOL
(for End Rope Termination)

Cod.: CEMBRE HN1

Dimensions in millimeters are subject to change without notice.

© 2017 Glenair, Inc.
U.S. CAGE Code 06324
Printed in Italy

VG95234 KR
Receptacle Protective Cover With Stainless Steel Chain

Shell size		
VG95234	KR	- 14 S
Basic Part Number	Bayonet Compatible Receptacle Cover with Stainless Steel Chain	

Application Notes

1. Metal protective cover for bayonet receptacle connectors with stainless steel chain.
2. Standard materials configuration consists of aluminum alloy with cadmium olive drab passivation IAW QQ-P-416.

Dimensions in millimeters are subject to change without notice.

© 2017 Glenair, Inc. U.S. CAGE Code 06324 Printed in Italy

VG95234 KR
Receptacle Protective Cover With Stainless Steel Chain

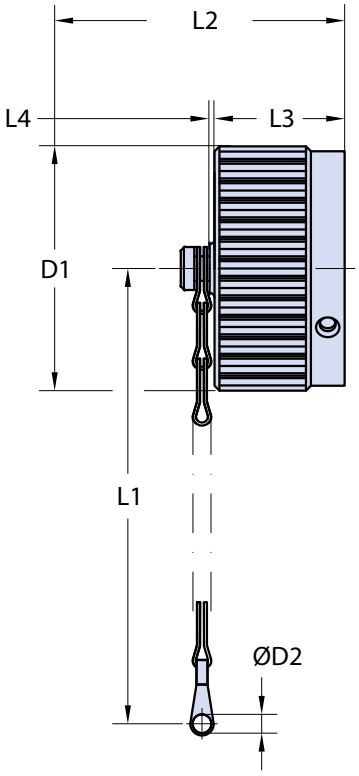

TABLE I: DIMENSIONS

Connector Size	D1 Max	ØD2 +0.6 -0	L1 Min	L2 Max	L3 Max	L4 Max	Weight gr. Max
10 SL	23.5	4.2	90	22.0	17.0	1.5	16
14 S	30.5	4.2	90	22.0	17.0	1.5	18
16 S	33.0	4.2	90	22.0	17.0	1.5	19
16	33.0	4.2	100	26.5	21.5	1.5	23
18	37.5	4.2	100	26.5	21.5	1.5	27
20	41.0	4.2	115	26.5	21.5	1.5	30
22	44.0	4.2	115	26.5	21.5	1.5	33
24	47.5	4.2	115	26.5	21.5	1.5	37
28	54.5	5.5	160	26.5	21.5	1.5	42
32	61.0	5.5	160	26.5	21.5	1.5	48
36	67.5	5.5	160	26.5	21.5	1.5	55

Dimensions in millimeters are subject to change without notice.

© 2017 Glenair, Inc.
U.S. CAGE Code 06324
Printed in Italy

VG95234 KA
Receptacle Protective Cover With Polyamide Black Rope

Shell size		
VG95234	KA	- 14 S
Basic Part Number	Rope Lanyard End Termination for Receptacle Cover	

Application Notes

1. Metal protective cover for bayonet receptacle connectors with polyamide black rope.
2. Standard materials configuration consists of aluminum alloy with cadmium olive drab passivation IAW QQ-P-416.

Dimensions in millimeters are subject to change without notice.

© 2017 Glenair, Inc. U.S. CAGE Code 06324 Printed in Italy

VG95234 KA
Receptacle Protective Cover With Polyamide Black Rope*

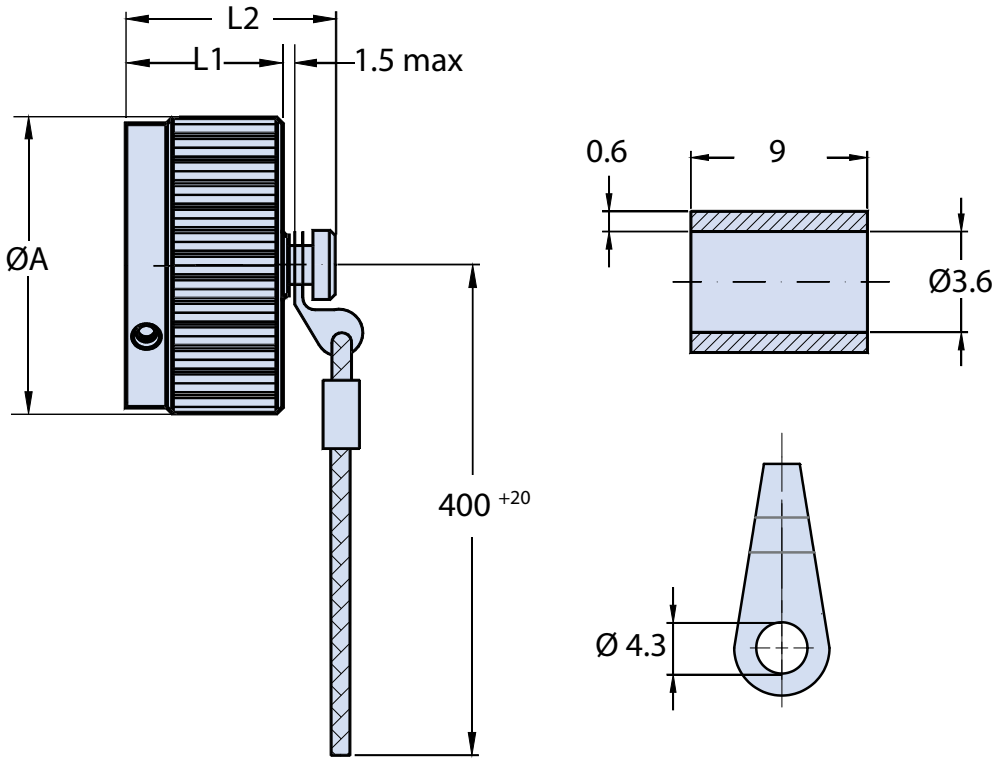

TABLE I: DIMENSIONS

Connector Size	ØA ±0.5	L1 Max.	L2 Max.	Weight gr. Max
10 SL	22.6	15.5	22.0	16
14 S	29.0	15.5	22.0	18
16 S	32.0	15.5	22.0	19
16	32.0	20.5	26.5	23
18	36.5	21.2	26.5	27
20	39.8	21.2	26.5	30
22	43.0	21.2	26.5	33
24	46.4	21.2	26.5	37
28	53.0	21.2	26.5	42
32	60.0	21.2	26.5	48
36	66.2	21.2	26.5	55

CRIMPING TOOL
(for End Rope Termination)

Cod.: CEMBRE HN1

Dimensions in millimeters are subject to change without notice.

© 2017 Glenair, Inc.
U.S. CAGE Code 06324
Printed in Italy

VG95234 B0D
Dummy Plug Stowage Receptacle with Open Back for Front Panel Mount Connectors

VG95234	B0D	14S
Basic Part Number	Dummy Plug Stowage Receptacle with Open back for Front Panel Mount Connectors	Shell size

DUMMY STOWAGE RECEPTACLE

Application Notes

1. Dummy receptacle stowage fitting protects the plug connector when not in use.
2. Standard materials configuration consists of aluminum alloy with cadmium olive drab passivation IAW QQ-P-416.

Dimensions in millimeters are subject to change without notice.

© 2017 Glenair, Inc. U.S. CAGE Code 06324 Printed in Italy

VG95234 B0D
Dummy Plug Stowage Receptacle with Open Back for Front Panel Mount Connectors

DUMMY STOWAGE RECEPTACLE

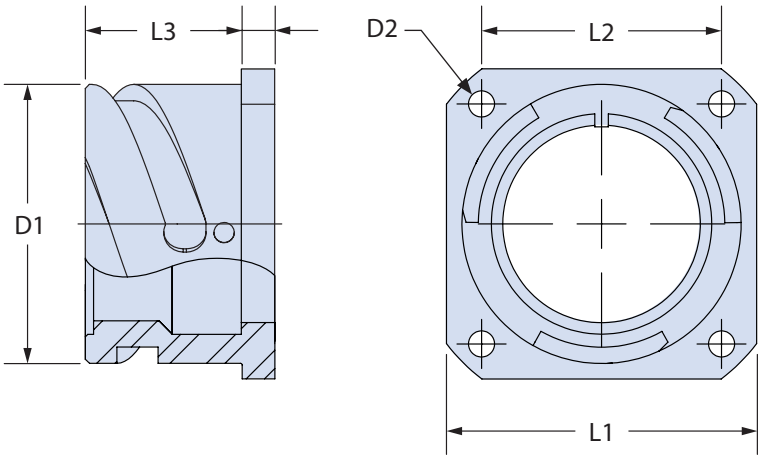

TABLE I: DIMENSIONS

Shell Size	ØD1 +0 -0.15	ØD2 H13	L1 ±0.3	L2 ±0.1	L3 Max	Weight gr. Max
10SL	18.2	3.2	25.4	18.2	17.5	14
14SL	24.6	3.2	30.0	23.0	18.0	16
16S	27.4	3.2	32.5	24.6	18.0	18
16	27.4	3.2	32.5	24.6	23.5	23
18	30.8	3.2	35.0	27.0	23.5	26
20	34.2	3.2	38.0	29.4	23.5	32
22	37.4	3.2	41.0	31.8	23.5	36
24	40.9	3.7	44.5	34.9	25.5	41
28	46.7	3.7	50.8	39.7	25.5	52
32	53.4	4.3	57.0	44.5	27.0	66
36	59.6	4.3	63.5	49.2	27.0	80

Dimensions in millimeters are subject to change without notice.

© 2017 Glenair, Inc. U.S. CAGE Code 06324 Printed in Italy

VG95234 KK
General Duty Class A Cable Clamp

VG95234	KK	-	6 A
Basic Part Number	MIL-DTL-5015 Compatible General Duty Cable Clamp		Shell size

GENERAL DUTY CLASS A CABLE CLAMP

Application Notes

1. General duty Class A cable clamp suitable for jacketed or multipolar cable or wires protected by tubing.
2. Standard materials configuration consists of aluminum alloy with cadmium olive drab passivation IAW QQ-P-416.

Dimensions in millimeters are subject to change without notice.

© 2017 Glenair, Inc. U.S. CAGE Code 06324 Printed in Italy

GENERAL DUTY CLASS A CABLE CLAMP

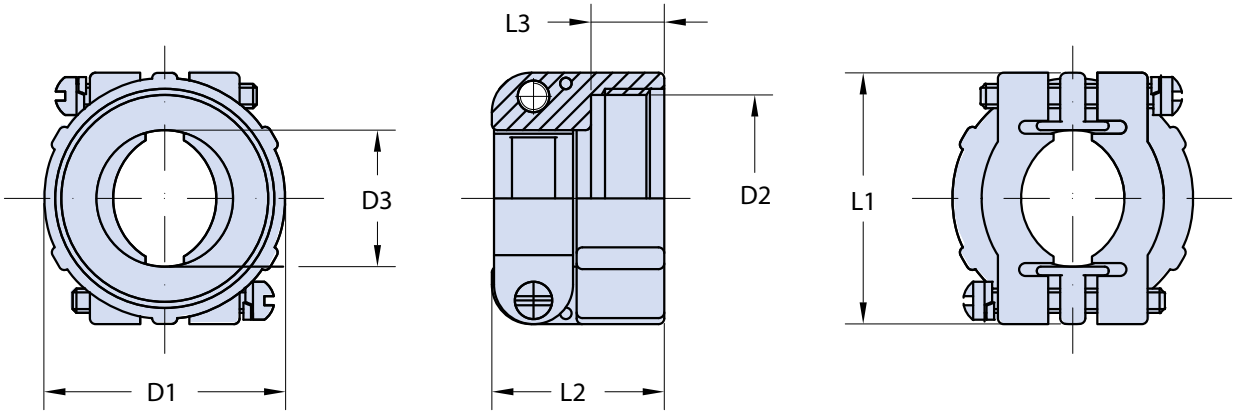

TABLE I: DIMENSIONS

Part Number	Connector Size	Related Sleeve (Not Supplied)	D1 ±0.79	D2	D3 Max	L1 ±0.79	L2 ±0.78	L3	Weight gr. Max
VG95234KK4	10SL	VG95234KT10SL	20.63	0.6250-24UNEF	8.0	22.23	20.63	10.3	15
VG95234KK6	14S	VG95234KT14S	24.61	0.7500-20UNEF	11.2	26.98	22.23	10.3	20
VG95234KK8	16 - 16S	VG95234KT16	27.79	0.8750-20UNEF	14.3	29.36	23.83	10.3	25
VG95234KK10	18	VG95234KT18	30.18	1.0000-20UNEF	15.9	31.75	23.83	10.3	25
VG95234KK12	20 - 22	VG95234KT20	34.93	1.1875-18NEF	19.1	37.31	23.83	10.3	35
VG95234KK16	24 - 28	VG95234KT24	42.06	1.4375-18NEF	23.9	42.88	26.19	10.3	45
VG95234KK20	32	VG95234KT32	51.59	1.7500 - 18UNS	31.8	51.59	27.79	11.9	55
VG95234KK24	36	VG95234KT36	56.36	2.000 - 18UNS	35.0	57.94	29.36	13.5	75

Dimensions in millimeters are subject to change without notice.

© 2017 Glenair, Inc. U.S. CAGE Code 06324 Printed in Italy

VG95234 KT
Neoprene Bushing for Cable
Used with General Duty Class A Cable Clamps

VG95234	KT	-	6 A
Basic Part Number	MIL-DTL-5015 Compatible General Duty Cable Clamp		Shell size

NEOPRENE BUSHING

Application Notes

1. Neoprene bushing for protection and reduction, used with Class A cable clamps.

Dimensions in millimeters are subject to change without notice.

© 2017 Glenair, Inc. U.S. CAGE Code 06324 Printed in Italy

VG95234 KT
Neoprene Bushing for Cable
Used with General Duty Class A Cable Clamps

NEOPRENE BUSHING

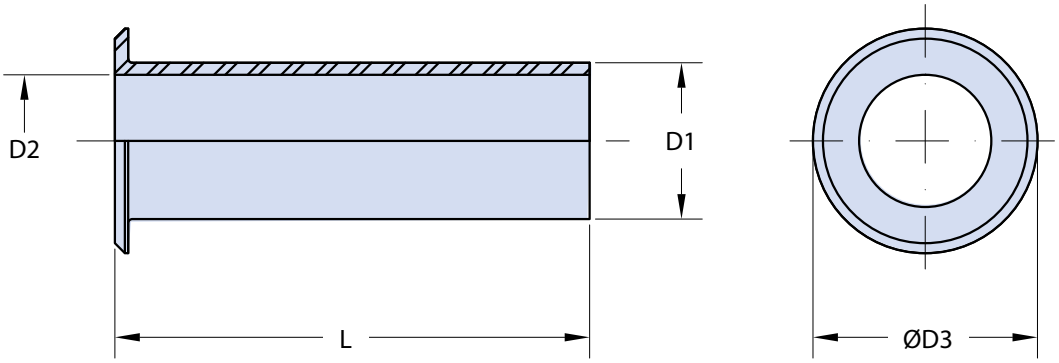

TABLE I: DIMENSIONS

Connector Size	Part Number	D1 ±0.2	D2 ±0.2	ØD3 ±0.4	L ±0.6	Weight gr. Max
10SL	VG95234KT10SL	8.0	6.6	10.0	70.0	3
14S	VG95234KT14S	10.9	9.1	12.7	67.0	5
16 - 16S	VG95234KT16	14.02	11.1	18.9	63.5	6
18	VG95234KT18	15.62	14.27	22.58	60.33	4
20 - 22	VG95234KT20	18.8	15.88	27.53	57.15	7
24 - 28	VG95234KT24	23.6	21.5	33.3	54.0	13
32	VG95234KT32	31.5	26.8	40.4	51.0	26
36	VG95234KT36	34.67	31.75	46.91	47.63	30

Dimensions in millimeters are subject to change without notice.

© 2017 Glenair, Inc.
U.S. CAGE Code 06324
Printed in Italy

VG95234 DA1
Front Panel Mount Receptacle Gasket

Shell size

VG95234	DA	18	-	1

Basic Part Number

FRONT PANEL MOUNT RECEPTACLE GASKET

Non-Conductive

Application Notes

1. Non-conductive gaskets for front-mount square flange receptacles.

Dimensions in millimeters are subject to change without notice.

© 2017 Glenair, Inc. U.S. CAGE Code 06324 Printed in Italy

FRONT PANEL MOUNT RECEPTACLE GASKET

DA1 Non-Conductive

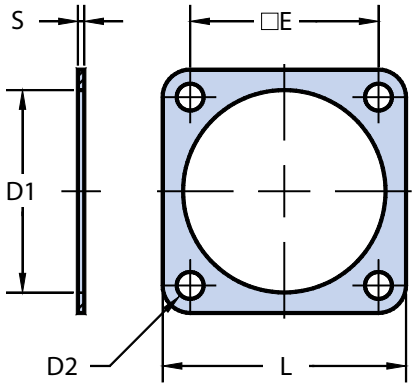

TABLE I: DIMENSIONS

Part Number	Shell Size	D1 +1 0	D2 +0.5 0	E	L ±0.5	S ±0.4	Weight gr. Max
VG95234 DA 10SL-1	**10SL**	15.7	4.2	18.2	25.4	1.0	2
VG95234 DA 14S-1	**14S**	22.1	4.2	23.0	30.0	1.0	2
VG95234 DA 16-1	**16S - 16**	25.3	4.2	24.6	32.5	1.0	2
VG95234 DA 18-1	**18**	28.4	4.2	27.0	35.0	1.0	2
VG95234 DA 20-1	**20**	31.6	4.2	29.4	38.0	1,0	2
VG95234 DA 22-1	**22**	34.8	4.2	31.8	41.0	1.0	2
VG95234 DA 24-1	**24**	38.0	4.2	34.9	44.5	1.0	2
VG95234 DA 28-1	**28**	44.3	5.1	39.7	50.8	1.0	2
VG95234 DA 32-1	**32**	50.7	5.1	44.5	57.0	1.0	2
VG95234 DA 36-1	**36**	57.0	5.1	49.2	63.5	1.0	2

Dimensions in millimeters are subject to change without notice.

© 2017 Glenair, Inc. U.S. CAGE Code 06324 Printed in Italy

VG95234 DH1
Rear Panel Mount Receptacle Gasket

Shell size

VG95234	DH	18	-	1

Basic Part Number

REAR PANEL MOUNT RECEPTACLE GASKET

Non-Conductive

Application Notes

1. Non-conductive gaskets for rear panel-mount square flange receptacles.

Dimensions in millimeters are subject to change without notice.

© 2017 Glenair, Inc. U.S. CAGE Code 06324 Printed in Italy

REAR PANEL MOUNT RECEPTACLE GASKET

DH1 Non-Conductive

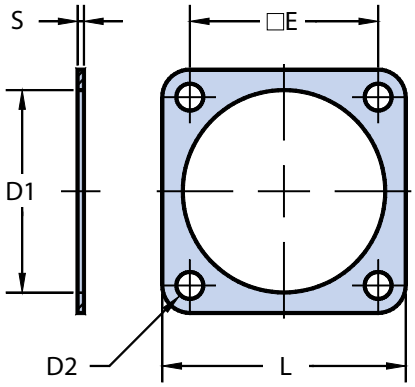

TABLE I: DIMENSIONS

Part Number	Shell Size	D1 +0.3 0	D2 +0.5 0	E	L ±0.5	S ±0.4	Weight gr. Max
VG95234 DH 10SL-1	**10SL**	18.2	4.2	18.2	25.4	1.0	2
VG95234 DH 14S-1	**14S**	24.6	4.2	23.0	30.0	1.0	2
VG95234 DH 16-1	**16S - 16**	27.4	4.2	24.6	32.5	1.0	2
VG95234 DH 18-1	**18**	30.8	4.2	27.0	35.0	1.0	2
VG95234 DH 20-1	**20**	34.2	4.2	29.4	38.0	1,0	2
VG95234 DH 22-1	**22**	37.4	4.2	31.8	41.0	1.0	2
VG95234 DH 24-1	**24**	40.9	4.2	34.9	44.5	1.0	2
VG95234 DH 28-1	**28**	46.7	5.1	39.7	50.8	1.0	2
VG95234 DH 32-1	**32**	53.4	5.1	44.5	57.0	1.0	2
VG95234 DH 36-1	**36**	59.6	5.1	49.2	63.5	1.0	2

Dimensions in millimeters are subject to change without notice.

© 2017 Glenair, Inc. U.S. CAGE Code 06324 Printed in Italy

VG95234 Bayonet-Lock Connectors
Crimping Table and Tools
Pin Contacts

VG95234 Contact P/N	GLENAIR Pin Contact P/N	Size	Wire Cross Section		Manual Crimp Tool		Turret	Pneumatic Crimping Tool	
			mm²	AWG	P/N	Order References	P/N	P/N	Order References
VG95234P10-001	10-234-10P-001G10	20	0,2÷0,4	22÷24	M22520/1-01	M.105001	600325	WA27F	M.105003
VG95234P10	10-234-10PG10	20	0,75÷1	18	M22520/1-01	M.105002	600325	WA27F	M.105003
VG95234P15S-001	10-234-15SP-001G10	16S	0,13÷0,33	22÷26	M22520/1-01	M.105003	600324	WA27F	M.105003
VG95234P15S-002	10-234-15SP-002G10	16S	0,33÷0,6	22÷20	M22520/1-01	M.105004	600324	WA27F	M.105003
VG95234P15S	10-234-15SPG10	16S	1÷1,5	16	M22520/1-01	M.105005	600324	WA27F	M.105003
VG95234P15-001	10-234-15P-001G10	16	0,13÷0,33	22÷26	M22520/1-01	M.105006	600324	WA27F	M.105003
VG95234P15-002	10-234-15P-002G10	16	0,33÷0,6	22÷20	M22520/1-01	M.105007	600324	WA27F	M.105003
VG95234P15	10-234-15PG10	16	1÷1,5	16	M22520/1-01	M.105008	600324	WA27F	M.105003
VG95234P25-001	10-234-25P-001G10	12	0,75÷1,3	18÷16	M22520/1-01	M.105009	600325	WA27F	M.105003
VG95234P25	10-234-25PG10	12	1,3÷2,97	16÷12	M22520/1-01	M.105010	600325	WA27F	M.105003
VG95234P25A	10-234-25APG10	12	1,3÷2,97	16÷12	M22520/1-01	M.105011	600325	WA27F	M.105003
VG95234P60-001	10-234-60P-001G10	8	2,5						
VG95234P60	10-234-60PG10	8	6						
VG95234P100	10-234-100PG10	8	10						
VG95234P8	10-234-8PG10	8	8÷10	8					
VG95234P160-001	10-234-160P-001G10	4	13	6					
VG95234P160	10-234-160PG10	4	16						
VG95234P4	10-234-4PG10	4	16÷21	4					
VG95234P500-001	10-234-500P-001G10	0	25						
VG95234P500-002	10-234-500P-002G10	0	35	2					
VG95234P500	10-234-500PG10	0	50						
VG95234P0	10-234-0PG10	0	50	0					

For further Crimping Steps details, please contact the factory.
Please refer to VG96927-5 for standard VG crimp tools setting.

Dimensions in millimeters are subject to change without notice.

© 2017 Glenair, Inc.
U.S. CAGE Code 06324
Printed in Italy

VG95234 Bayonet-Lock Connectors
Crimping Table and Tools
Pin Contacts

VG95234 Contact P/N	GLENAIR Pin Contact P/N	Oleodinamic Crimp Tool		Crimping Die		Insertion Tool		Removal Tool	
		P/N	Order References	P/N	Order References	P/N	Order References	P/N	Order References
VG95234P10-001	10-234-10P-001G10					DAK126-20	M.117346	DRK81-20	M.118251
VG95234P10	10-234-10PG10					DAK126-20	M.117346	DRK81-20	M.118251
VG95234P15S-001	10-234-15SP-001G10					DAK168-16	M.117083	DRK96	M.118250
VG95234P15S-002	10-234-15SP-002G10					DAK168-16	M.117083	DRK96	M.118250
VG95234P15S	10-234-15SPG10					DAK168-16	M.117083	DRK96	M.118250
VG95234P15-001	10-234-15P-001G10					DAK168-16	M.117083	DRK96	M.118250
VG95234P15-002	10-234-15P-002G10					DAK168-16	M.117083	DRK96	M.118250
VG95234P15	10-234-15PG10					DAK168-16	M.117083	DRK96	M.118250
VG95234P25-001	10-234-25P-001G10					DAK168-12	M.117082	DRK96	M.118250
VG95234P25	10-234-25PG10					DAK168-12	M.117082	DRK96	M.118250
VG95234P25A	10-234-25APG10					DAK168-12	M.117082	DRK96	M.118250
VG95234P60-001	10-234-60P-001G10	HT45	M.112004	ME2	M.112005		M.117344		M.118260
VG95234P60	10-234-60PG10	HT45	M.112004	ME2	M.112005		M.117344		M.118260
VG95234P100	10-234-100PG10	HT45	M.112004	ME2	M.112005		M.117344		M.118260
VG95234P8	10-234-8PG10	HT45	M.112004	ME2	M.112005		M.117344		M.118260
VG95234P160-001	10-234-160P-001G10	HT45	M.112004	ME5	M.112006		M.117347		M.118270
VG95234P160	10-234-160PG10	HT45	M.112004	ME5	M.112006		M.117347		M.118270
VG95234P4	10-234-4PG10	HT45	M.112004	ME5	M.112006		M.117347		M.118270
VG95234P500-001	10-234-500P-001G10	HT45	M.112004	ME10	M.112007		M.117348		M.118280
VG95234P500-002	10-234-500P-002G10	HT45	M.112004	ME10	M.112007		M.117348		M.118280
VG95234P500	10-234-500PG10	HT45	M.112004	ME10	M.112007		M.117348		M.118280
VG95234P0	10-234-0PG10	HT45	M.112004	ME10	M.112007		M.117348		M.118280

For further Crimping Steps details, please contact the factory.
Please refer to VG96927-5 for standard VG crimp tools setting.

Dimensions in millimeters are subject to change without notice.

© 2017 Glenair, Inc.

VG95234 Bayonet-Lock Connectors
Crimping Table and Tools
Sockets Contacts

VG95234 Contact P/N	GLENAIR Pin Contact P/N	Size	Wire Cross Section		Manual Crimp Tool		Turret	Pneumatic Crimping Tool	
			mm²	AWG	P/N	Order References	P/N	P/N	Order References
VG95234S10-001	10-234-10S-001G10	20	0,2÷0,4	22÷24	M22520/1-01	M.105001	600325	WA27F	M.105003
VG95234S10	10-234-10SG10	20	0,75÷1	18	M22520/1-01	M.105001	600325	WA27F	M.105003
VG95234S15S-001	10-234-15SS-001G10	16S	0,13÷0,33	22÷26	M22520/1-01	M.105001	600324	WA27F	M.105003
VG95234S15S-002	10-234-15SS-002G10	16S	0,33÷0,6	22÷20	M22520/1-01	M.105001	600324	WA27F	M.105003
VG95234S15S	10-234-15SSG10	16S	1÷1,5	16	M22520/1-01	M.105001	600324	WA27F	M.105003
VG95234S15-001	10-234-15S-001G10	16	0,13÷0,33	22÷26	M22520/1-01	M.105002	600324	WA27F	M.105003
VG95234S15-002	10-234-15S-002G10	16	0,33÷0,6	22÷20	M22520/1-01	M.105003	600324	WA27F	M.105003
VG95234S15	10-234-15SG10	16	1÷1,5	16	M22520/1-01	M.105004	600324	WA27F	M.105003
VG95234S25-001	10-234-25S-001G10	12	0,75÷1,3	18÷16	M22520/1-01	M.105005	600325	WA27F	M.105003
VG95234S25	10-234-25SG10	12	1,3÷2,97	16÷12	M22520/1-01	M.105006	600325	WA27F	M.105003
VG95234S60-001	10-234-60S-001G10	8	2,5						
VG95234S60	10-234-60SG10	8	6						
VG95234S100	10-234-100SG10	8	10						
VG95234S8	10-234-8SG10	8	8÷10	8					
VG95234S160-001	10-234-160S-001G10	4	13	6					
VG95234S160	10-234-160SG10	4	16						
VG95234S4	10-234-4SG10	4	16÷21	4					
VG95234S500-001	10-234-500S-001G10	0	25						
VG95234S500-002	10-234-500S-002G10	0	35	2					
VG95234S500	10-234-500SG10	0	50						
VG95234S0	10-234-0SG10	0	50	0					

For further Crimping Steps details, please contact the factory.
Please refer to VG96927-5 for standard VG crimp tools setting.

Dimensions in millimeters are subject to change without notice.

© 2017 Glenair, Inc.
U.S. CAGE Code 06324
Printed in Italy

VG95234 Bayonet-Lock Connectors
Crimping Table and Tools
Socket Contacts

VG95234 Contact P/N	GLENAIR Pin Contact P/N	Oleodinamic Crimp Tool		Crimping Die		Insertion Tool		Removal Tool		Guide Pin
		P/N	Order References	P/N	Order References	P/N	Order References	P/N	Order References	Order References
VG95234S10-001	10-234-10S-001G10					DAK126-20	M.117346	DRK81-20	M.118251	M.125007
VG95234S10	10-234-10SG10					DAK126-20	M.117346	DRK81-20	M.118251	M.125007
VG95234S15S-001	10-234-15SS-001G10					DAK168-16	M.117083	DRK96	M.118250	M.125001
VG95234S15S-002	10-234-15SS-002G10					DAK168-16	M.117083	DRK96	M.118250	M.125001
VG95234S15S	10-234-15SSG10					DAK168-16	M.117083	DRK96	M.118250	M.125001
VG95234S15-001	10-234-15S-001G10					DAK168-16	M.117083	DRK96	M.118250	M.125001
VG95234S15-002	10-234-15S-002G10					DAK168-16	M.117083	DRK96	M.118250	M.125001
VG95234S15	10-234-15SG10					DAK168-16	M.117083	DRK96	M.118250	M.125001
VG95234S25-001	10-234-25S-001G10					DAK168-12	M.117082	DRK96	M.118250	M.125002
VG95234S25	10-234-25SG10					DAK168-12	M.117082	DRK96	M.118250	M.125002
VG95234S60-001	10-234-60S-001G10	HT45	M.112004	ME2	M.112005		M.117344		M.118260	M.125003
VG95234S60	10-234-60SG10	HT45	M.112004	ME2	M.112005		M.117344		M.118260	M.125003
VG95234S100	10-234-100SG10	HT45	M.112004	ME2	M.112005		M.117344		M.118260	M.125003
VG95234S8	10-234-8SG10	HT45	M.112004	ME2	M.112005		M.117344		M.118260	M.125003
VG95234S160-001	10-234-160S-001G10	HT45	M.112004	ME5	M.112006		M.117347		M.118270	
VG95234S160	10-234-160SG10	HT45	M.112004	ME5	M.112006		M.117347		M.118270	
VG95234S4	10-234-4SG10	HT45	M.112004	ME5	M.112006		M.117347		M.118270	
VG95234S500-001	10-234-500S-001G10	HT45	M.112004	ME10	M.112007		M.117348		M.118280	
VG95234S500-002	10-234-500S-002G10	HT45	M.112004	ME10	M.112007		M.117348		M.118280	
VG95234S500	10-234-500SG10	HT45	M.112004	ME10	M.112007		M.117348		M.118280	
VG95234S0	10-234-0SG10	HT45	M.112004	ME10	M.112007		M.117348		M.118280	

For further Crimping Steps details, please contact the factory.
Please refer to VG96927-5 for standard VG crimp tools setting.

Dimensions in millimeters are subject to change without notice.

© 2017 Glenair, Inc.
U.S. CAGE Code 06324
Printed in Italy

VG95234 Bayonet-Lock Connectors
Part Number Index

Product Description	Page
VG95234 Bayonet-Lock Assemblies Product Line Overview	A-1
VG95234 Bayonet-Lock Assemblies Applications	A-2
VG95234 Bayonet-Lock Assemblies Available Components	A-3
VG95234 Bayonet-Lock General Duty Crimp Contact Connector Cross Reference	A-4
VG95234 Bayonet-Lock Crimp Contact Connector Technical Data	A-5
VG95234 Bayonet-Lock General Duty Crimp Contact (MIL-C-5015 Type) Master How to Order	A-6
Glenair Series ITS Commercial Equivalent Product Line	A-7
VG95234 Contact Arrangement Tables	A-8
VG95234 Contact Arrangement Tables	A-9
VG95234 Insert Rotations	A-10
VG95234 Insert Rotations	A-11
VG95234 Contact Arrangements Front View of Pin Insert	A-12
VG95234 Contact Arrangements Front View of Pin Insert	A-13
VG95234 Contact Arrangements Front View of Pin Insert	A-14
VG95234 Contact Arrangements Front View of Pin Insert	A-15
VG95234 Contact Arrangements Front View of Pin Insert	A-16
VG95234 Contact Arrangements Front View of Pin Insert	A-17
VG95234 Contact Arrangements Front View of Pin Insert	A-18
VG95234 Contact Arrangements Front View of Pin Insert	A-19
VG95234 Pin Contacts	A-20
VG95234 Socket Contacts	A-21
VG95234 Sealing Plugs and Alternate Key Position	A-22
VG95234 Bayonet Lock Assemblies Maximum Panel Thickness and Panel Cut-Out Mounting Data	A-23
VG95234 A Front Panel Wall Mount Receptacle	B-1
VG95234 A Front Panel Wall Mount Receptacle	B-2
VG95234 B1 and VG95234 B2 Rear Panel Wall Mount Receptacle with Threaded (B1) and Thru-Holes (B2)	B-3
VG95234 B1 and VG95234 B2 Rear Panel Wall Mount Receptacle with Threaded (B1) and Thru-Holes (B2)	B-4
VG95234 C1 and VG95234 C2 Bulkhead Feed-Thru Receptacle with Threaded (C1) and Thru-Holes (C2)	B-5
VG95234 C1 and VG95234 C2 Bulkhead Feed-Thru Receptacle with Threaded (C1) and Thru-Holes (C2)	B-6
VG95234 D Straight Plug with Cable Clamp, Bushing and Wire Sealing Grommet	B-7
VG95234 D Straight Plug with Cable Clamp, Bushing and Wire Sealing Grommet	B-8
VG95234 E 90° Plug with Cable Clamp, Bushing and Wire Sealing Grommet	B-9
VG95234 E 90° Plug with Cable Clamp, Bushing and Wire Sealing Grommet	B-10
VG95234 E1 Plug with Conduit Adapter	B-11
VG95234 E1 Plug with Conduit Adapter	B-12
VG95234 F In Line Receptacle with Cable Clamp, Bushing and Wire Sealing Grommet	B-13
VG95234 F In Line Receptacle with Cable Clamp, Bushing and Wire Sealing Grommet	B-14
VG95234 G and VG95234 T Straight Plug with Heat Shrink Boot Adapter (G), Grounding Fingers (T) & Wire S.Grommet	B-15
VG95234 G and VG95234 T Straight Plug with Heat Shrink Boot Adapter (G), Grounding Fingers (T) & Wire S. Grommet	B-16

© 2017 Glenair, Inc. U.S. CAGE Code 06324 Printed in Italy

VG95234 Bayonet-Lock Connectors
Part Number Index

Product Description	Page
VG95234 H Straight Plug with Conduit Adapter	B-17
VG95234 H Straight Plug with Conduit Adapter	B-18
VG95234 J1 and VG95234 J2 Wall Mount Receptacle with Cable Clamp, Bushing & Wire S.Grommet With Thru-Holes	B-19
VG95234 J1 and VG95234 J2 Wall Mount Receptacle with Cable Clamp, Bushing & Wire S.Grommet With Thru-Holes	B-20
VG95234 M Straight Plug with EMI/RFI Backshell, Grounding Fingers, Wire Sealing Grommet and Heat Shrink Boot Lip	B-21
VG95234 M Straight Plug with Grounding Fingers, EMI/RFI Backshell, Wire Sealing Grommet and Heat Shrink Boot Lip	B-22
VG95234 N1 and VG95234 N2 Wall Mount Receptacle with EMI/RFI Backshell, Heat Shrink Boot Lip & Sealing Grommet	B-23
VG95234 N1 and VG95234 N2 Wall Mount Receptacle with EMI/RFI Backshell, Heat Shrink Boot Lip &Sealing Grommet	B-24
VG95234 U1 and VG95234 U2 Rear Wall Mount Receptacle with Heat Shrink Boot Adapter and Sealing Grommet	B-25
VG95234 U1 and VG95234 U2 Rear Wall Mount Receptacle with Heat Shrink Boot Adapter and Sealing Grommet	B-26
VG95234 V In-Line Receptacle with Heat Shrink Boot Adapter	B-27
VG95234 V In-Line Receptacle with Heat Shrink Boot Adapter	B-28
VG95234 KB Plug Protective Cover With Stainless Steel Chain	C-1
VG95234 KB Plug Protective Cover With Stainless Steel Chain	C-2
VG95234 KC Plug Protective Cover With Polyamide Black Rope	C-3
VG95234 KC Plug Protective Cover With Polyamide Black Rope	C-4
VG95234 KR Receptacle Protective Cover With Stainless Steel Chain	C-5
VG95234 KR Receptacle Protective Cover With Stainless Steel Chain	C-6
VG95234 KA Receptacle Protective Cover With Polyamide Black Rope	C-7
VG95234 KA Receptacle Protective Cover With Polyamide Black Rope	C-8
VG95234 B0D Dummy Plug Stowage Receptacle with Open Back for Front Panel Mount Connectors	C-9
VG95234 B0D Dummy Plug Stowage Receptacle with Open Back for Front Panel Mount Connectors	C-10
VG95234 KK General Duty Class A Cable Clamp	C-11
VG95234 KK General Duty Class A Cable Clamp	C-12
VG95234 KT Neoprene Bushing for Cable Used with General Duty Class A Cable Clamps	C-13
VG95234 KT Neoprene Bushing for Cable Used with General Duty Class A Cable Clamps	C-14
VG95234 DA1 Front Panel Mount Receptacle Gasket	C-15
VG95234 DA1 Front Panel Mount Receptacle Gasket	C-16
VG95234 DH1 Rear Panel Mount Receptacle Gasket	C-17
VG95234 DH1 Rear Panel Mount Receptacle Gasket	C-18
VG95234 Bayonet-Lock Connectors Crimping Table and Tools Pin Contacts	C-19
VG95234 Bayonet-Lock Connectors Crimping Table and Tools Sockets Contacts	C-22
VG95234 Bayonet-Lock Connectors Part Number Index	D-1

© 2017 Glenair, Inc. U.S. CAGE Code 06324 Printed in Italy

VG95234 Bayonet-Lock Connectors
Glenair Product Warnings

WARNING

FAILURE TO FOLLOW THESE INSTRUCTIONS MAY RESULT IN DAMAGE TO EQUIPMENT, SERIOUS PERSONAL INJURY OR EVEN DEATH.

It is the user's responsibility to ensure these products are used safely. Glenair, Inc., including all Glenair, Inc. subsidiaries, is NOT responsible for damage to equipment, personal injury or death from use of Glenair, Inc. products.

Only qualified electrical technicians should use interconnection products in high voltage and other electrical conditions.

Interconnection products must be clean and dry when installed. Mating and de-mating should never occur under load.

Damaged interconnection products must be replaced immediately by a trained electrical technician.

Glenair, Inc. reserves the right to modify this Warning, any other warning, all catalogs, gleniar.com website, and any other technical information with or without notice.

For further information and technical assistance, please contact your local Glenair Sales Office or see our website: **www.glenair.com**

© 2017 Glenair, Inc.

GLENAIR, INC. • 1211 AIR WAY • GLENDALE, CA 91201-2497 • 818-247-6000 • FAX 818-500-9912
www.glenair.com **E-Mail: sales@glenair.com**

Glenair®

INNOVATION

Performance • Durability • Ease of Use

POWER TRIP

ITS power

Geo-Marine®

Band-Master™ ATS

Well-Master™ 260°

Octobyte

SAV-CON®
CONNECTOR SAVERS

ARMORLITE™

HiPer D MIL 24308™

GUARDIAN

GLASS-SEALED
Hermetic
CONNECTORS

SUPERSEAL™

This special industrial-strength capability guide provides a comprehensive overview of Glenair's "no gap" family of interconnect solutions for rugged industrial, rail, geophysical and power industry applications. No other interconnect manufacturer in the world offers such a broad range of connectors, backshells, wire protection conduit, shrink boots, tools and more for harsh-environment industrial applications. All our solutions are backed with our high availability customer service model, which includes in-stock inventory for thousands of critical part numbers, no dollar or quantity minimum orders, free samples upon request, free engineering and application development and more. Contact the factory or our industrial/rail product team for application engineering assistance.

Why Choose GLENAIR?

Plenty of Raw Materials!

Outstanding Customer Service!

Abundant Machining Capacity!

In-House Assembly!

Huge "Same-Day" Inventory!

One of North America's
and Machining

High-Production Injection Molding Equipment

State-of-the-Art Plating Capabilities

The Industry's Most Experienced EMI/RFI Braided Shielding Specialists

Glenair®

Largest CNC Milling Installations

Clean Rooms for Filter Array and Printed Circuit Board Assembly

MISSION-CRITICAL

INTERCONNECT SOLUTIONS

Glenair, Inc.

1211 Air Way • Glendale, California • 91201-2497

Telephone: 818-247-6000 • Fax: 818-500-9912 • sales@glenair.com

www.glenair.com

Glenair Power Products Group
20 Sterling Drive
Wallingford, CT
06492
Telephone: 203-741-1115
Facsimile: 203-741-0053
sales@glenair.com

Glenair Microway Systems
7000 North Lawndale Avenue
Lincolnwood, IL
60712
Telephone: 847-679-8833
Facsimile: 847-679-8849

Glenair Electric GmbH
Schaberweg 28
61348 Bad Homburg
Germany
Telephone: 06172 / 68 16 0
Facsimile: 06172 / 68 16 90
info@glenair.de

Glenair Italia S.p.A.
Via Del Lavoro, 7
40057 Quarto Inferiore –
Granarolo dell'Emilia
Bologna, Italy
Telephone: +39-051-782811
Facsimile: +39-051-782259
info@glenair.it

Glenair Korea
B-1304 Gunpo IT Valley
148 Gosan-Ro, Gunpo-Si
Kyunggi-Do, Korea
435-733
Telephone: +82-31-8068-1090
Facsimile: +82-31-8068-1092
sales@glenair.kr

Glenair UK Ltd
40 Lower Oakham Way
Oakham Business Park
Mansfield, Notts
NG18 5BY England
Telephone: +44-1623-638100
Facsimile: +44-1623-638111
sales@glenair.co.uk

Glenair Nordic AB
Gustav III : S Boulevard 46
SE-169 27 Solna
Sweden
Telephone: +46-8-50550000
sales@glenair.se

Glenair Iberica
C/ La Vega, 16
45612 Velada
Spain
Telephone: +34-925-89-29-88
Facsimile: +34-925-89-29-87
sales@glenair.es

Glenair France SARL
7, Avenue Parmentier
Immeuble Central Parc #2
31200 Toulouse
France
Telephone: +33-5-34-40-97-40
Facsimile: +33-5-61-47-86-10
sales@glenair.fr

© 2017 Glenair, Inc.

Printed in Italy